Digital Pre-Amplifier 70DSC950

/00S/005S/17S

Service
Service
Service

Service Manual

CONTENTS PAGE

Specifications			2
Conections and Controls			3
Warnings			4
Serviee hints			5-6-7
Circuitdiagram	Power Supply unit		8
Printed Circuit Boord	Power Supply unit		9-10
Wiring diagram			11-12
Circuitdiagram	Analog Selector	A/D unit	13-14-15
Circuitdiagram	Communication	A/D unit	16
Circuitdiagram	Scaler/Headphone	A/D unit	17-18
Printed Circuit Board	Components side	A/D unit	19-20-21
Printed Circuit Board	Chips side	A/D unit	22-23-24
Circuitdiagram	Digital selector	A/D unit	25-26
Circuitdiagram	A/D converter	A/D unit	27-28
Circuitdiagram	Digital front unit		29-30-31
Printed Circuit Board	Digital front unit A-B		32-33-34
Exploded View			35-36
List of Mechanical Parts			37
List of Electrical Parts			38-39-40-41-42-43-44-45

Published by Consumer Electronics Printed in The Netherlands ©Copyright reserved Subject to modification 4822 725 23909

PHILIPS

PHILIPS

PCS 57 723

SPECIFICATIONS

General

Mains voltage	: 220V (110V-110V-240V service solietion)
Mains frequentie	: 50-60Hz
Power consumpion	: 17W max
Dimension (WxHxD)	: 437mm x 90mm x 300mm

Pre Amplifier

Frequency response		
	Linear inputs	: 20Hz - 20kHz ± 1dB
	Phono inputs	: 20Hz - 20kHz ± 1dB acc.IEC
Signal to Noise ratio		
	Linear inputs	: 65dB
	Phono input MM	: 74dB
	Phono input MC	: 68dB
T.H.D. Linear input 2,12V 1kHz		: 0,7%
Toon control	Bass	: + 5dB
	Treble	: - 5dB
Crosstalk (anolog in puts)		
	stereo channels	: 50db from 100Hz - 10kHz acc.IHF
	sources	: 65dB from 100Hz - 10kHz acc.IHF
Inputs	Linear	: 150 mVrms 47kΩ
	Phono MM	: 2,7 mVrms 47kΩ /220PF
	Phono MC	: 280 mVrms 100Ω /100PF
	Digital	: 200 mVpp 75Ω
Outputs	Linear	: 150 mVrms 2k5
	Digital	: 200 mVpp 75Ω
	Headphone	: 5,6 Vrms max Ro 2kΩ

Connections and Controls

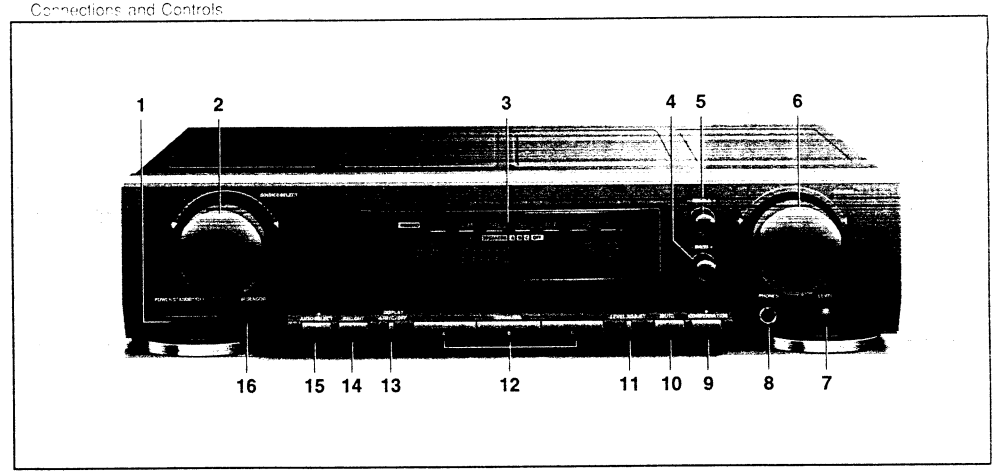

1. Power Standby/off switch	1351	9. Compensation	1607
2. Souree selector	1663	10. Mute	1608
3. Display	6609	11. Level adjust input	1600
4. Bass	1657	12. Speaker switches A/B/C system	1601-1602
5. Treble	1661		1603
6. Volume	1659	13. Display switch for A/B/C system	1606
7. Level headphone	3700	14. Recording out switch	1605
8. Headphone soeket	1710	15. Auto select switch ESI system	1604

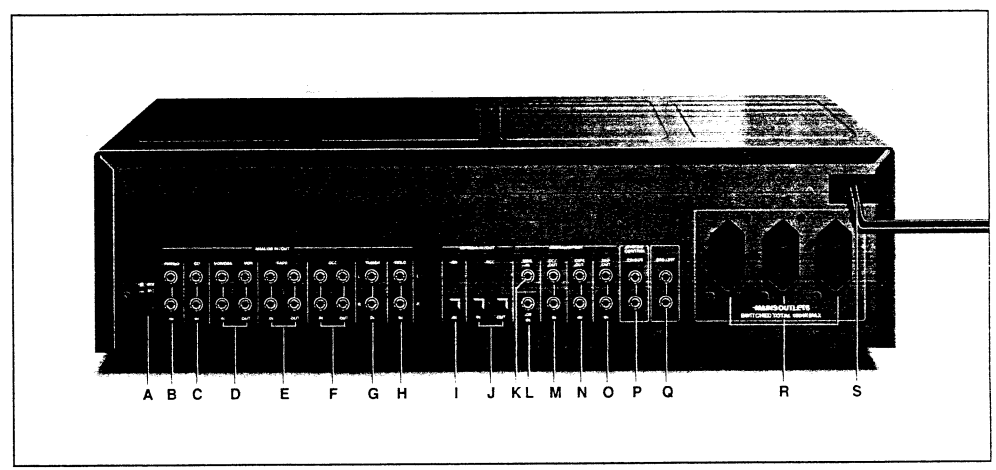

A. MM/MC Phono selector switch	1756	K. DBS digital input socket	1955
B. Phono input socket	1751	L. CD digital input socket	1952
C. CD input socket	1751	M. DCC digital in-and output socket	1952
D. VCR/DBS input socket	1752	N. Cass deck digital in-and output socket	1951
E. Cass deck in-and output sockets	1753	O. DSP digital in-and output socket	1951
F. DCC in-and output sockets	1754	P. ESI bus	1915
G. Tuner input sockets	1755	Q. DSS digital output speakers socket	1915
H. TV/LD input sockets	1755	R. Mains outlets	1360-1361
I. CD optcal input sockets	1960		1362
J. DCC optical in-and output socket	1961-1950	S. Mains lead	1367

GB

Safety regulations require that the set be restored to its original condition and that parts which are identical with those specified be used.

NL

Veiligheidsbepalingen vereisen dat het apparaat in zijn oorspronkelijke toestand wordt teruggebracht en dat onderdelen, identiek aan de gespecificeerde worden toegepast.

D

Bei jeder Reparatur sind die geltenden Sicherheitsvorschriften zu beachten. Der Originalzustand des Geräts darf nicht verändert werden für Reparaturen sind Original-Ersatzteile zu verwenden.

I

Le norme di sicurezza esigono che l'apparecchio venga rimesso nelle condizioni originali e che siano utilizzati i pezzi di ricambiago identici a quelli specificati.

F

Les normes de sécurité exigent que l'appareil soit remis à l'état d'origine et que soient utilisées les pieces de rechange identiques à celles spécifiées.

Pour votre sécurité, ces documents doivent etre utilisés par des specialistes agrées, seuls habilités à réparer votre appareil en panne.

WARNINGS

GB **WARNING**

All ICs and many other semi conductors are susceptible to electrostatic discharges (ESD).
Careless handling during repair can reduce life drastically.When reparing, make sure that you are connected with the same potential as the mass of the set via a wrist wrap with resistance. Keep components and tools also at this potential.

NL
WAARSCHUWING

Alle ICs en vele andere halfgeleiders zijn gevoelig voor electrostatische ontladingen (ESD)
Onzorgvuldig behandelen tijden reparatie kan de levensduur drastisch doen verminderen. Zorg ervoor dat U tijdens reparatie via een polsband met weerstand verbonden bent met hetzelfde potentiaal als de massa van het apparaat. Houd componenten en hulpmiddelen ook op ditzelfde potentiaal.

D **WARNUNG**

Alle ICs und viele andere Halbleiter sind empfindlich gegenüber electrostatischen Entladungen (ESD).
Unsorgfältige Behandlung im Reparaturfall kan die Lebensdauer drastisch reduzieren. Veranlassen Sie, dass Sie im Reparaturfall über ein Pulsarmband mit Widerstand verbunden sind mit dem gleichen Potential wie die Masse des Gerätes.
Bauteile und Hilfsmittel auch auf dieses gleiche Potential halten.

F **ATTENTION**

Tous les IC et beaucoup d'autres semi-conducteurs sont sensibles aux décharges statiques (ESD).
Leur longévité pourrair étre considérablement écourtée par le fait qu'aucune precaution n'est prise à leur manipulation.
Lors de réparations, s'assurer de bien étre relié au meme potentiel que la masse de l'appareil et enfiler le bracelet serti d'une résistance de sécurité.
Veiller á ce que les composants ainsi que les outils que l'on utilise soient également á ce potentiel.

I
AVERTIMENTO

Tutti IC e parecchi semi-conduttori sono sensibili alle scariche statiche. (ESD)
La loro longevità potrebbe essere fortemente ridatta in caso di non osservazione della più grande cauzione alla loro manipolazione. Durante le riparazioni occorre quindi essere collegato allo stesso potenziale che quello della massa dell apparecchio tramite un braccialetto a resistenza.
Assicurarsi che i componenti e anche gli utensili con quali si lavora siano anche a questo potenziale.

EXPLANATION OF THE ABBREVIATIONS

Power Supply

FIL 1	Filament 1 Supply display
FIL 2	Filament 2 Supply display
SB FIL	Standby filament
VKK	Negative Supply Master processor
PD	Power Down

Digital Front

LVL syne	Leveler synchronisation signal
LVL 0	Leveler data lowest significant bit
LVL 1	Leveler data
LVL 2	Leveler data Most significant bit
CTRL	Control line data in or out
DA	Data signal master processor
CL	Clock signal master processor
CE	Chip enable line for analog selector
TV SEL	TV selection
STR SCA	Strobe scaler 7825
DIGITAL	Detection for digital input
INIT	Inisialisation
MAGIC	Status line of the touch control
SSA	Source selector A line
SSB	Source selector B line
SB	Source selector stanby
EECLK	Clock signal for EEPROM
EEDAT	Data signal for EEPROM
MULED	Mute leds for ESI and compensation
ESI	Enhanced System Intelligence
COMPENS	Compensation status line for speaker system
SDIS	Synchronisation for display
ACK	Acknowlege line for master and slave processor
DATA IN	Data signal for master processor
DATA OUT	Data signal for slave processor
DSP	Digital signal processing
DBS	Direct Broodcast Satalite signal for master processor

Analog and digital selector

CE SEL	Chip enable line for analog selector
DA	Data signal master processor
CL	Clock signal master processor
EBV DS	Europe Broadcasting Union signal for digital selector
DBS	Direct Broadcast Satalite signal for digital selector
DSP in/out	Digital signal processing signal in/out
DCC in/out	Digital compact cassette recorder signal in/out

A/D Cpmverter

LVL SYNC	Leveler synchronisation signal
LVL 0	Leveler data lowest significant bit
LVL 1	Leveler data
LVL 2	Leveler data Most signficant bit
EBV OUT	Europe Broadcasting Union signal
ANL	Analog audio signal left
ANR	Analog audio signal richt
INIT	Initialisation for A/D converter

Communication

CTRL	Control line data in or out
EBV DS	Europe Broadeasting Union signal for digital speaker system
INIT	Initialisation for digital speaker system
DSS 1 and 2	Digital speaker system control line 1 and 2
EASYL 1 and 2	Easylink control line 1 and 2

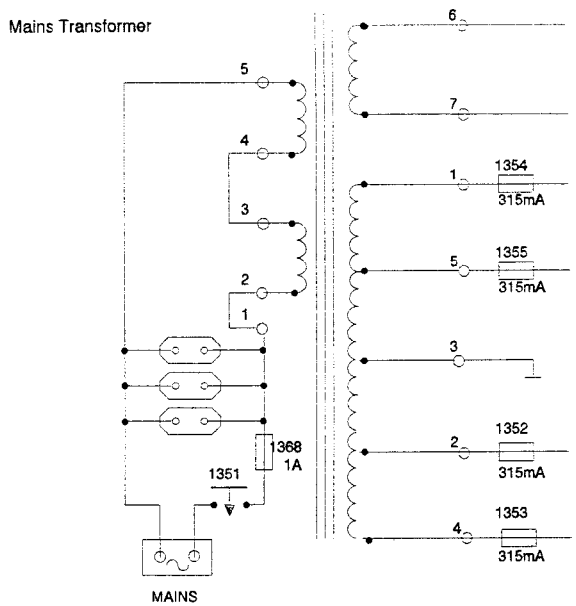

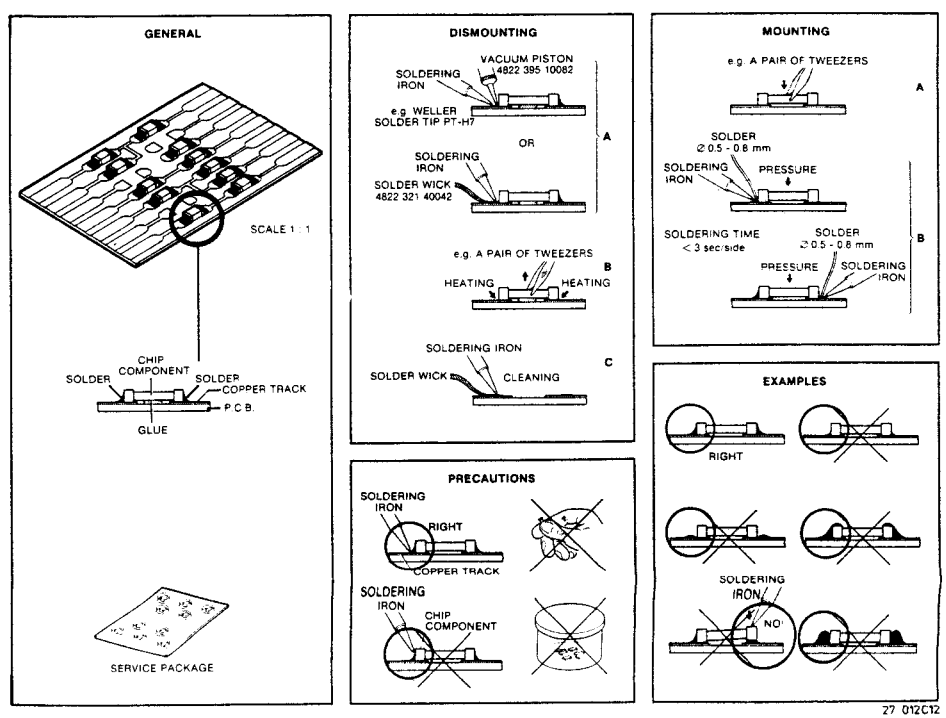

27 012C12

GRID ASSIGMENT

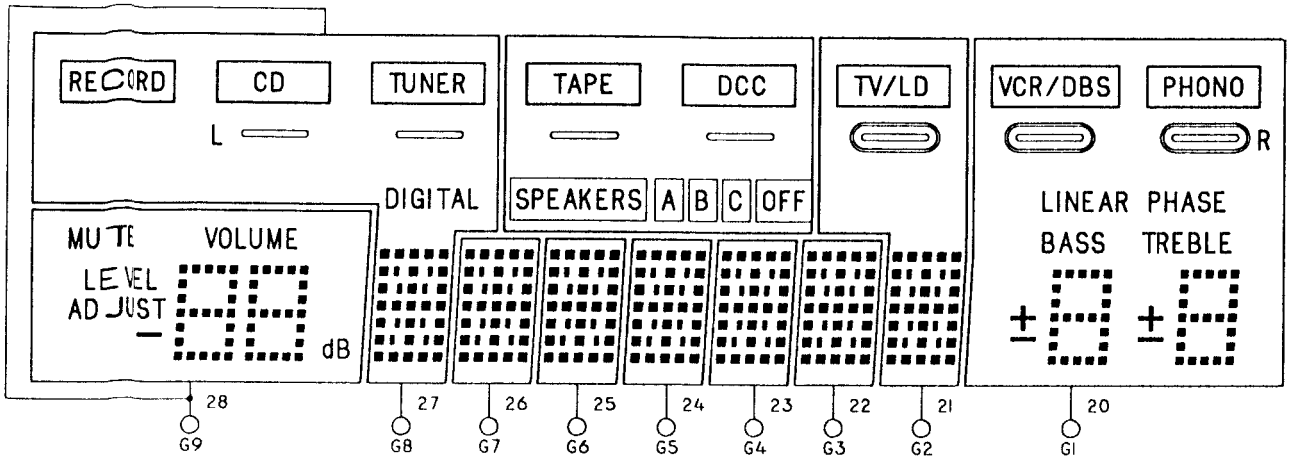

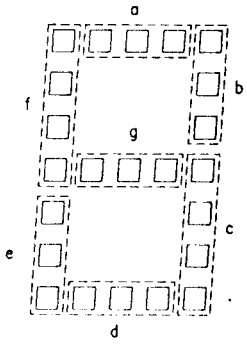

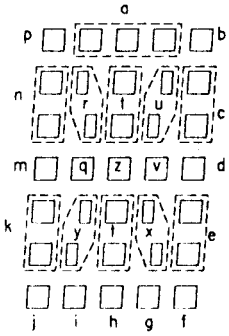

PIN CONNECTION

PIN NR	47	46	45	44	43	42	41	40	39	38	37	36	35	34	33	32	31	30	29	28	27	26	25	24	23	22	21	20	19	18	17	16	15	14	13	12	11	10	9	8	7	6	5	4	3	2	1
CONNECTION	F2	F2	NP	NP	P30	P29	P28	P27	P26	P25	P24	P23	P22	P21	P20	P19	P18	P17	P16	G9	G8	G7	G6	G5	G4	G3	G2	G1	P15	P14	P13	P12	P11	P10	P9	P8	P7	P6	P5	P4	P3	P2	P1	NP	NP	F1	F1

F1,F2= FILAMENT NP = NP PIN 1G-9G = GRID

	G9	G8	G7	G6	G5	G4	G3	G2	G1
P1	–	RECORD	–	–	–	–	–	–	–
P2	TAPE	CD	–	–	–	–	–	–	VCR/DBS
P3	DCC	TUNER	–	–	–	–	–	TV/LD	PHONO
P4	TAPE DCC	TUNER CD	–	–	–	–	–	TV/LD	PHONO VCR/DBS
P5	OFF	DIGITAL	–	–	–	–	–	–	VCR/DBS
P6	C	–	–	–	–	–	–	TV/LD	PHONO
P7	TAPE	CD	–	–	–	–	–	–	PHONO
P8	DCC	TUNER	–	–	–	–	–	TV/LD	VCR/DBS
P9	B	L	–	–	–	–	–	–	R
P10	A	9p	8p	7p	6p	5p	4p	3p	LINEAR PHASE
P11	SPEAKERS	9a	8a	7a	6a	5a	4a	3a	TREBLE
P12	MUTE	9b	8b	7b	6b	5b	4b	3b	BASS
P13	LEVEL ADJUST	9n	8n	7n	6n	5n	4n	3n	d.1
P14	VOLUME	9r	8r	7r	6r	5r	4r	3r	d.1
P15	dB	9u	8u	7u	6u	5u	4u	3u	d.2
P16		9c	8c	7c	6c	5c	4c	3c	d.2
P17	10a	9m	8m	7m	6m	5m	4m	3m	1a
P18	11a	9q	8q	7q	6q	5q	4q	3q	2a
P19	10b	9z	8z	7z	6z	5z	4z	3z	1b
P20	11b	9v	8v	7v	6v	5v	4v	3v	2b
P21	10f	9d	8d	7d	6d	5d	4d	3d	1f
P22	11f	9k	8k	7k	6k	5k	4k	3k	2f
P23	10g	9y	8y	7y	6y	5y	4y	3y	1g
P24	11g	9t	8t	7t	6t	5t	4t	3t	2g
P25	10c	9x	8x	7x	6x	5x	4x	3x	1c
P26	11c	9e	8e	7e	6e	5e	4e	3e	2c
P27	10e	9j	8j	7j	6j	5j	4j	3j	1e
P28	11e	9g	8g	7g	6g	5g	4g	3g	2e
P29	10d	9h	8h	7h	6h	5h	4h	3h	1d
P30	11d	9f	8f	7f	6f	5f	4f	3f	2d

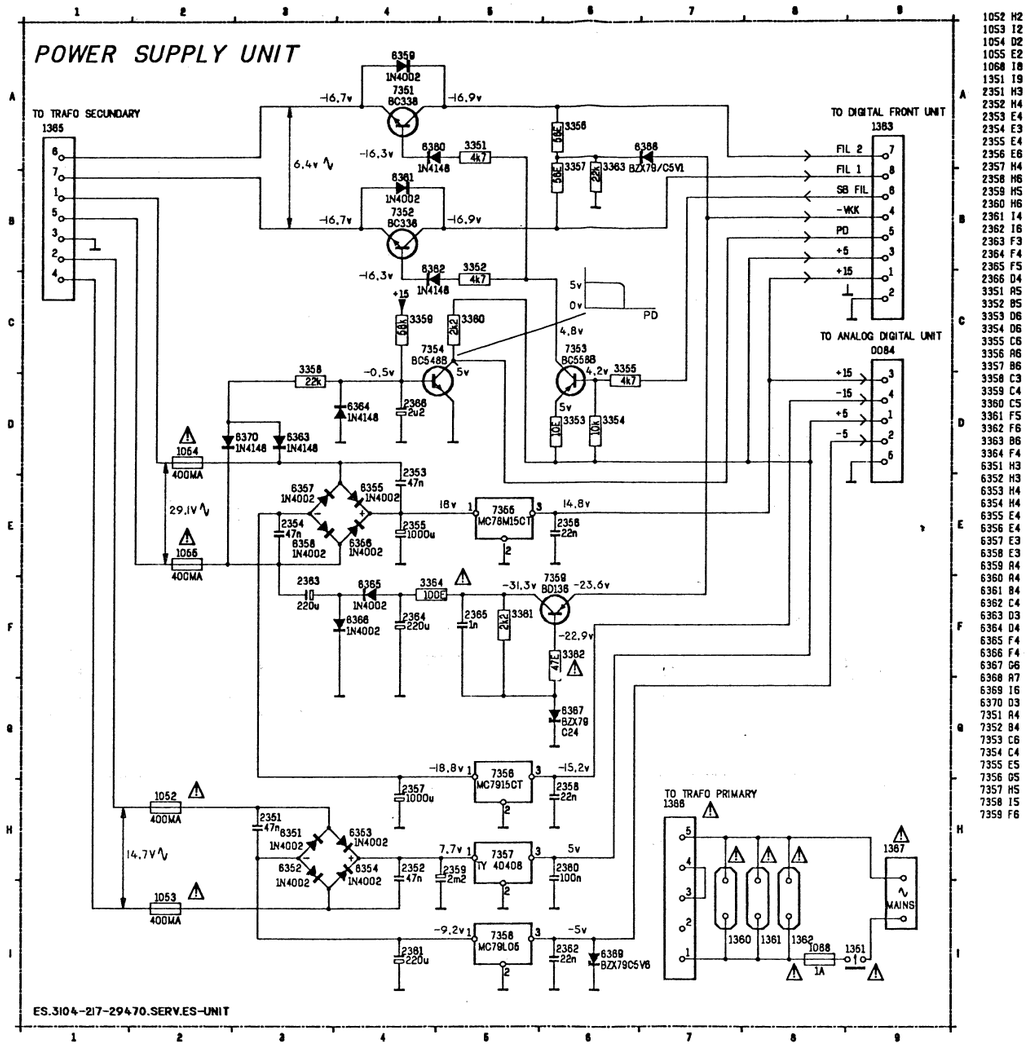

1052 H2
1053 I2
1054 D2
1055 E2
1068 I8
1351 I9
2351 H3
2352 H4
2353 E4
2354 E3
2355 E4
2356 E6
2357 H4
2358 H6
2359 H5
2360 H6
2361 I4
2362 I6
2363 F3
2364 F4
2365 F5
2366 D4
3351 A5
3352 B5
3353 D6
3354 D6
3355 C6
3356 A6
3357 B6
3358 C3
3359 C4
3360 C5
3361 F5
3362 F6
3363 B6
3364 F4
6351 H3
6352 H3
6353 H4
6354 H4
6355 E4
6356 E4
6357 E3
6358 E3
6359 A4
6360 A4
6361 B4
6362 C4
6363 D3
6364 D4
6365 F4
6366 F4
6367 G6
6368 A7
6369 I6
6370 D3
7351 A4
7352 B4
7353 C6
7354 C4
7355 E5
7356 D5
7357 H5
7358 I5
7359 F6

0081 B6	1055 D4	1359 D4	1366 D2	2353 C5	2359 C5	2365 C7	3355 D7	3361 C6	6353 C5	6359 D8	6365 D7	7351 D7	7357 B5	9328 D2	9334 D5
0082 C6	1068 B3	1360 E2	1367 C2	2354 D4	2360 C6	2366 B7	3356 E6	3362 C6	6354 C5	6360 D8	6366 D7	7352 D7	7358 C6	9329 C2	9335 D6
0084 C7	1351 D3	1361 C2	1369 B7	2355 D5	2361 D5	3351 D7	3357 E6	3363 D6	6355 D5	6361 E8	6367 C7	7353 C7	7359 C6	9330 C2	9336 E6
1052 C4	1356 C4	1362 B2	1369 C3	2356 D6	2362 C5	3352 D7	3358 D6	3364 D6	6356 D5	6362 E8	6368 E7	7354 C7	8301 B7	9331 C3	9337 C6
1053 B4	1357 C4	1363 B8	2351 C4	2357 D5	2363 D6	3353 C7	3359 C7	6351 C5	6357 D5	6363 E7	6369 C7	7355 D6	9326 B2	9332 C4	9338 C8
1054 D4	1358 D4	1365 C3	2352 B4	2358 E6	2364 C6	3354 C7	3360 C7	6352 C5	6358 D5	6364 D7	6370 E6	7356 D6	9327 D2	9333 C6	

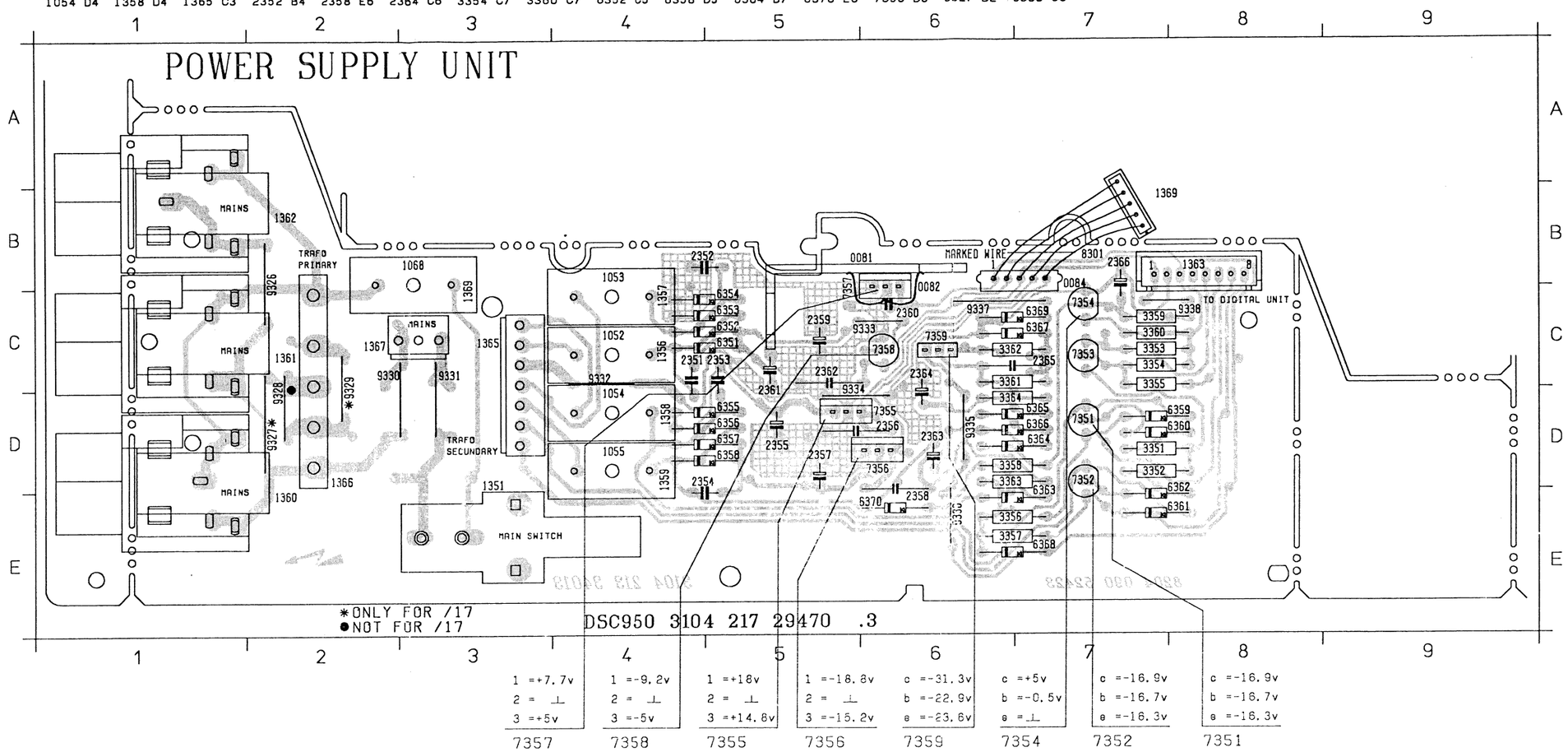

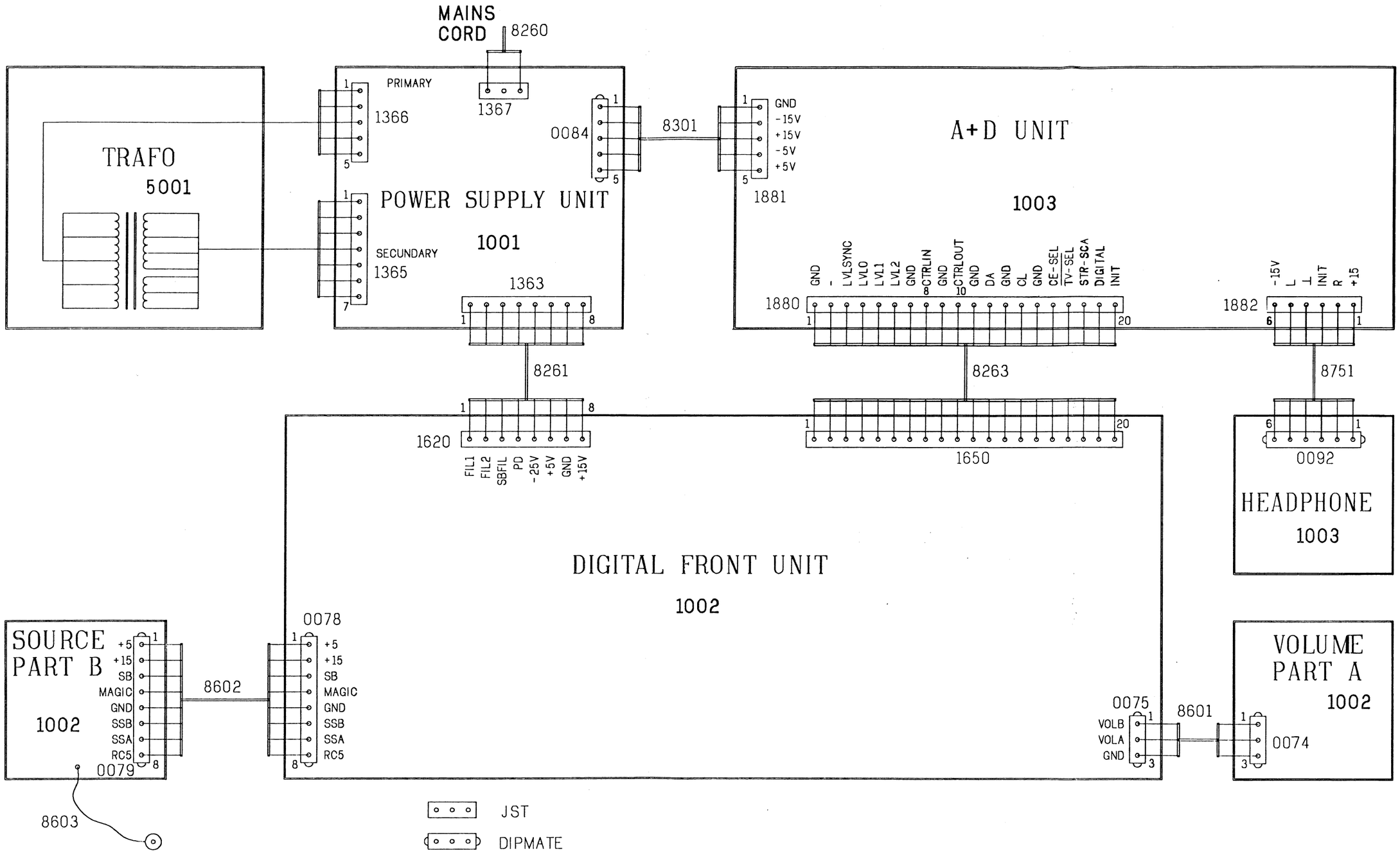
MAINS CORD
8260
TRAFO
5001
PRIMARY
1366
1367
SECUNDARY
1365
POWER SUPPLY UNIT
1001
0084
8301
GND
-15V
+15V
-5V
+5V
1881
A+D UNIT
1003
1363
8261
1880
GND
-
LVLSYNC
LVLO
LVL1
LVL2
GND
CTRLIN
GND
CTRLOUT
GND
DA
GND
CL
GND
CE-SEL
TV-SEL
STR-SCA
DIGITAL
INIT
8263
1882
-15V
L
⊥
INIT
R
+15
8751
1620
FIL1
FIL2
SBFIL
PD
-25V
+5V
GND
+15V
1650
0092
HEADPHONE
1003
DIGITAL FRONT UNIT
1002
SOURCE PART B
1002
+5
+15
SB
MAGIC
GND
SSB
SSA
RC5
0079
8602
0078
8603
JST
DIPMATE
0075
VOLB
VOLA
GND
8601
0074
VOLUME PART A
1002

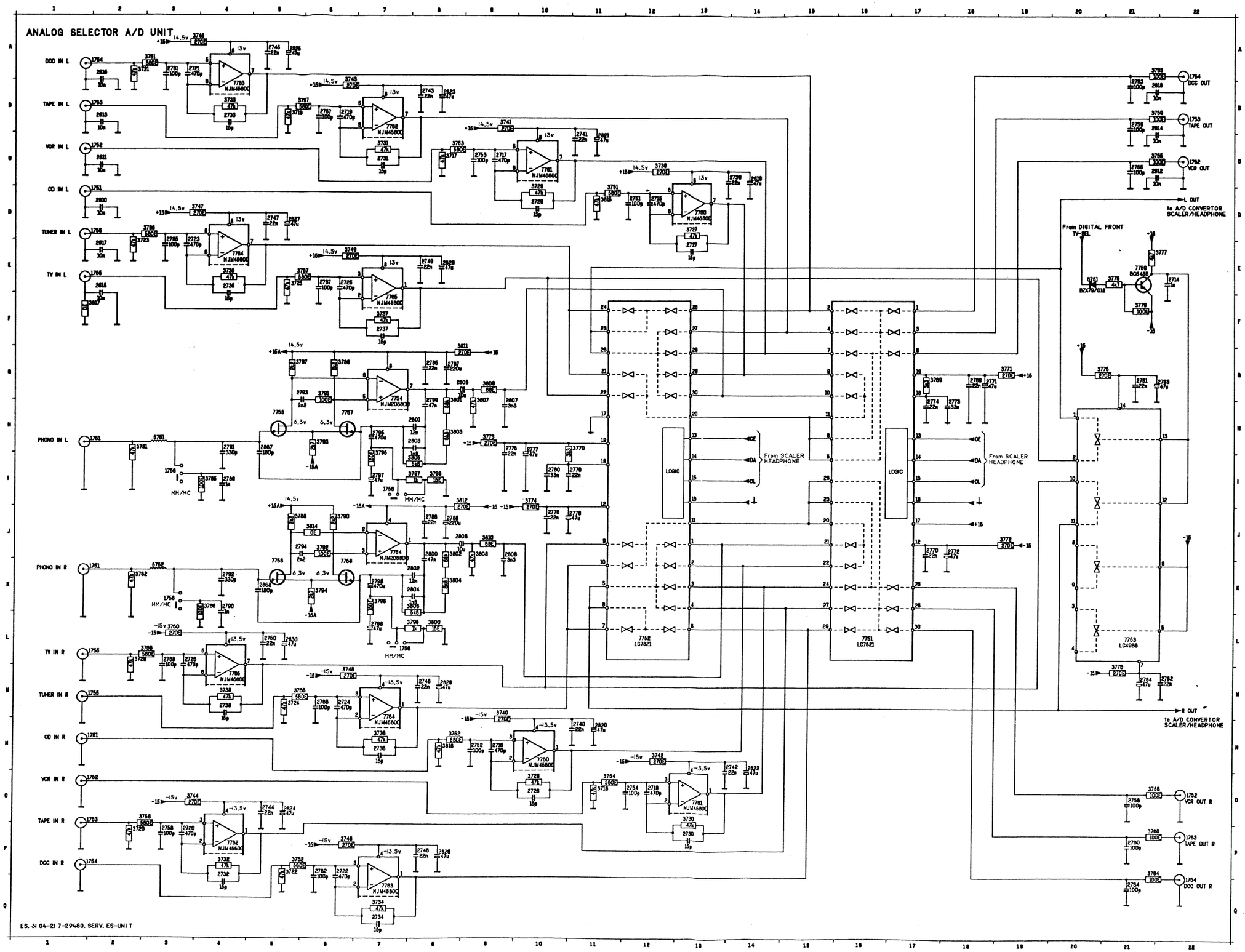

1751 D1	3718 D11
1751 H1	3719 B5
1751 K1	3720 P2
1751 N1	3721 R2
1752 C1	3722 P5
1752 C22	3723 E2
1752 D1	3724 M5
1752 D22	3725 E5
1753 D1	3726 L2
1753 D22	3727 D13
1753 D1	3728 D10
1753 P22	3729 D10
1754 A1	3730 D13
1754 A22	3731 C7
1754 P1	3732 P4
1754 B22	3733 B4
1755 D1	3734 G7
1755 E1	3735 E4
1755 L1	3736 N7
1755 N1	3737 F7
1758 I3	3738 N4
1758 I7	3739 C12
1758 K3	3740 M8
1758 L7	3741 B8
2714 C22	3742 N12
2715 D12	3743 B6
2716 M8	3744 G3
2717 C8	3745 R3
2718 D12	3746 P6
2718 M6	3747 D3
2720 P3	3748 M6
2721 R3	3749 E6
2722 P6	3750 L3
2723 E3	3751 D11
2724 M6	3752 M8
2725 E6	3753 C8
2726 L3	3754 D11
2727 E13	3755 C21
2728 D18	3756 G21
2729 D18	3757 B5
2730 P13	3758 D3
2731 C7	3759 B21
2732 G4	3760 P21
2733 B4	3761 R3
2734 G7	3762 P5
2735 E4	3763 R21
2736 N7	3764 P21
2737 F7	3765 D3
2738 M4	3766 M5
2739 C13	3767 E5
2740 N11	3768 L3
2741 C11	3769 D17
2742 N13	3770 H11
2743 B8	3771 D18
2744 B5	3772 J18
2745 M5	3773 H8
2746 P8	3774 I10
2747 D5	3775 G20
2748 M8	3776 M21
2749 E8	3777 E21
2750 L5	3778 E21
2751 D12	3779 F21
2752 M8	3781 H2
2753 C8	3782 K2
2754 D12	3785 I4
2755 C21	3786 K4
2756 B21	3787 D5
2757 B6	3788 J5
2758 P3	3789 D6
2759 B21	3790 J6
2760 P21	3791 D6
2761 R3	3792 J6
2762 P6	3793 M6
2763 B21	3794 K6
2764 B21	3795 I7
2765 E3	3796 K7
2766 M6	3797 I8
2767 E8	3798 L8
2768 L3	3799 I8
2769 D18	3800 L8
2770 J17	3801 M8
2771 D18	3802 J8
2772 J18	3803 M8
2773 H18	3804 K8
2774 H17	3805 I8
2775 M8	3806 K8
2776 J18	3807 H9
2777 H18	3808 J9
2778 J18	3809 D9
2779 I18	3810 J9
2780 I18	3811 D8
2781 B21	3812 I8
2782 R22	3814 J8
2783 B21	3815 D11
2784 R21	3816 M8
2785 D8	3817 F1
2786 J8	5751 H3
2787 D8	5752 K3
2788 J8	8751 E20
2789 I4	7751 L18
2790 K4	7752 L12
2791 H4	7753 L21
2792 K4	7754 H7
2793 B5	7754 J7
2794 J5	7755 H5
2795 H7	7756 K5
2796 K7	7757 H6
2797 I7	7758 K6
2798 L7	7759 E21
2799 H8	7760 D13
2800 J8	7760 N10
2801 H8	7761 C10
2802 K8	7761 D13
2803 H8	7762 B7
2804 K8	7762 F4
2805 D8	7763 B4
2806 J8	7763 G7
2807 H9	7764 E4
2808 J9	7764 M7
2810 D2	7765 F7
2811 C2	7765 M4
2812 C21	
2813 B2	
2814 B21	
2815 R2	
2816 R21	
2817 E2	
2818 E2	
2819 C14	
2820 N11	
2821 C11	
2822 N14	
2823 B8	
2824 D5	
2825 R5	
2826 P8	
2827 D5	
2828 M8	
2829 E8	
2830 L5	
2867 H5	
2868 K5	
3717 C8	

1915	I9	2916	M2	2921	J5	2928	I8	3916	K5	3925	G5	3930	[illegible]	[illegible]	[illegible]	3940	B6	3945	E5	3954	F4	6918	C3	7922	C6
1915	C9	2917	L2	2922	G2	2929	K8	3917	I5	3926	H5	3931	G6	3936	C4	3941	C7	3946	M2	3957	J2	6919	C7	7923	B4
1915	A9	2918	I6	2923	E7	2930	C3	3918	J4	3927	F2	3932	H6	3937	C4	3942	D6	3948	E6	5916	L2	6920	F5	7924	K6
1915	J9	2919	J6	2924	I8	2931	D6	3919	I4	3928	E2	3933	H6	3938	B5	3943	D7	3949	G6	6916	D7	6921	E4	7925	I6
2915	B5	2920	I5	2926	B8	3915	G4	3924	F2	3929	E7	3934	C3	3939	B4	3944	F4	3953	F5	6917	C4	7921	C6	7926	C4

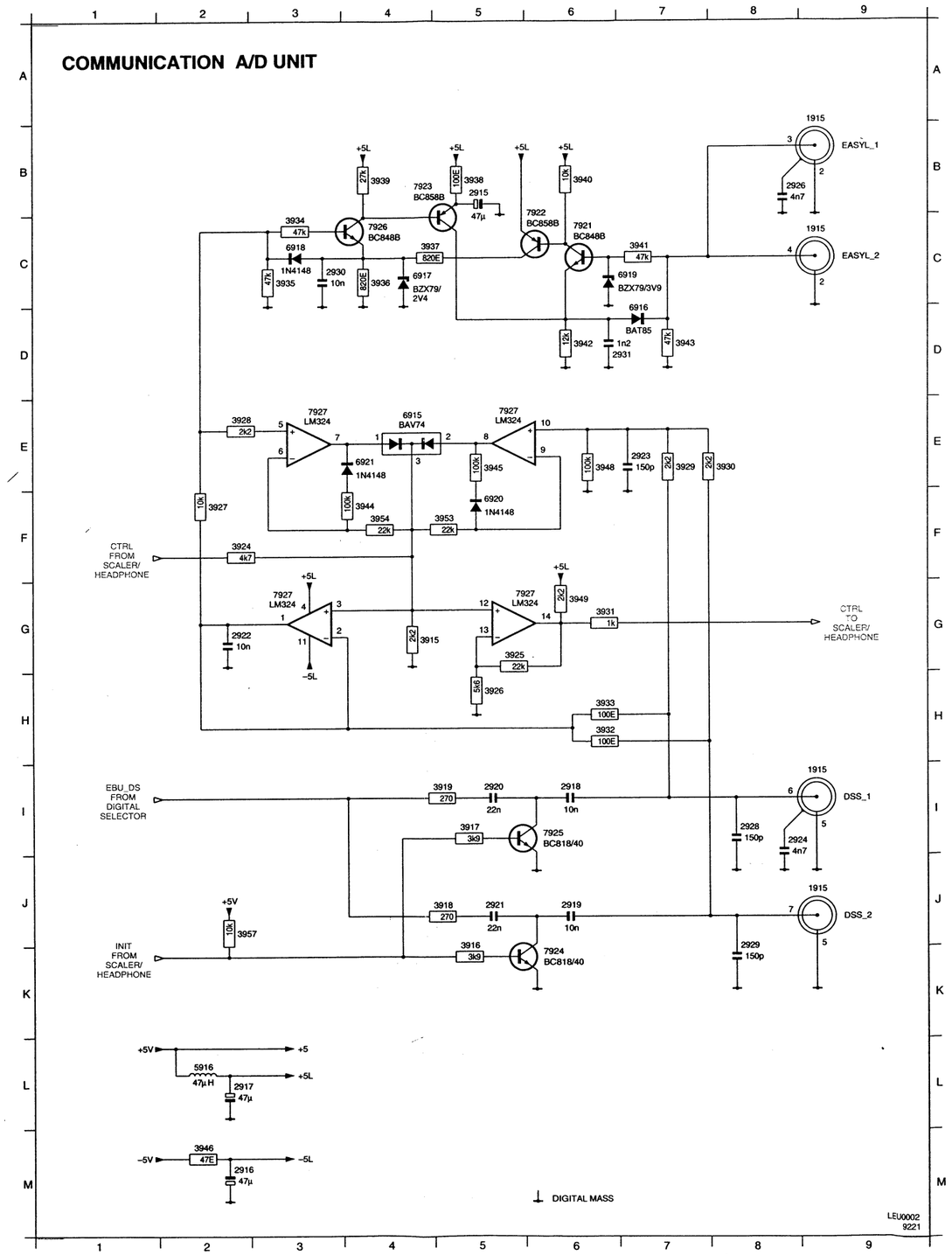

092	B15	2700	K19	2705	C18	2712	K18	2834	B13	2839	B12	2844	L11	[illegible]	B7	2854	L7	2860	E13	3700	C17	3705	C20	3710	J16	3715	G17	3833	L8	3838	L11	3843	B8	3848	J9	3853	B9	3857	C9	3862	J13	3867	C17	7701	[illegible]	[illegible]	K8
1710	C21	2701	C19	2707	D19	2713	C18	2835	L8	2840	I12	2845	D12	2850	K7	2856	K12	2861	C20	3700	K17	3706	J19	3711	C16	3716	G16	3834	K13	3839	B6	3844	J8	3849	B9	3854	K9	3858	L9	3863	E8	3921	I2	7702	J17	7828	B8
1710	J21	2702	J16	2708	J19	2831	A8	2836	K13	2841	B12	2846	L12	2851	C8	2857	C13	2862	K20	3702	J16	3707	D19	3712	K19	3830	C12	3835	A11	3840	L6	3845	A9	3850	K9	3855	B9	3859	C9	3864	F6	3922	M6	7703	G17	7829	B12
1880	D1	2703	C16	2709	C20	2832	B13	2837	L9	2842	I12	2847	B6	2852	K8	2858	J13	2864	F6	3703	C16	3708	J18	3713	B19	3831	A8	3836	I11	3841	B6	3846	J9	3851	B9	3855	C12	3860	L9	3865	F6	7700	J19	7704	G16	7829	K13
1882	B14	2704	J18	2710	K20	2833	A9	2838	K13	2843	D11	2848	K6	2853	B7	2859	E8	2865	G6	3704	J20	3709	D18	3714	G17	3832	B13	3837	D11	3842	K6	3847	A9	3852	K9	3856	L9	3861	C13	3866	K17	7700	C19	7825	E8	7832	B11

7833 I11

SCALER/HEADPHONE A/D UNIT

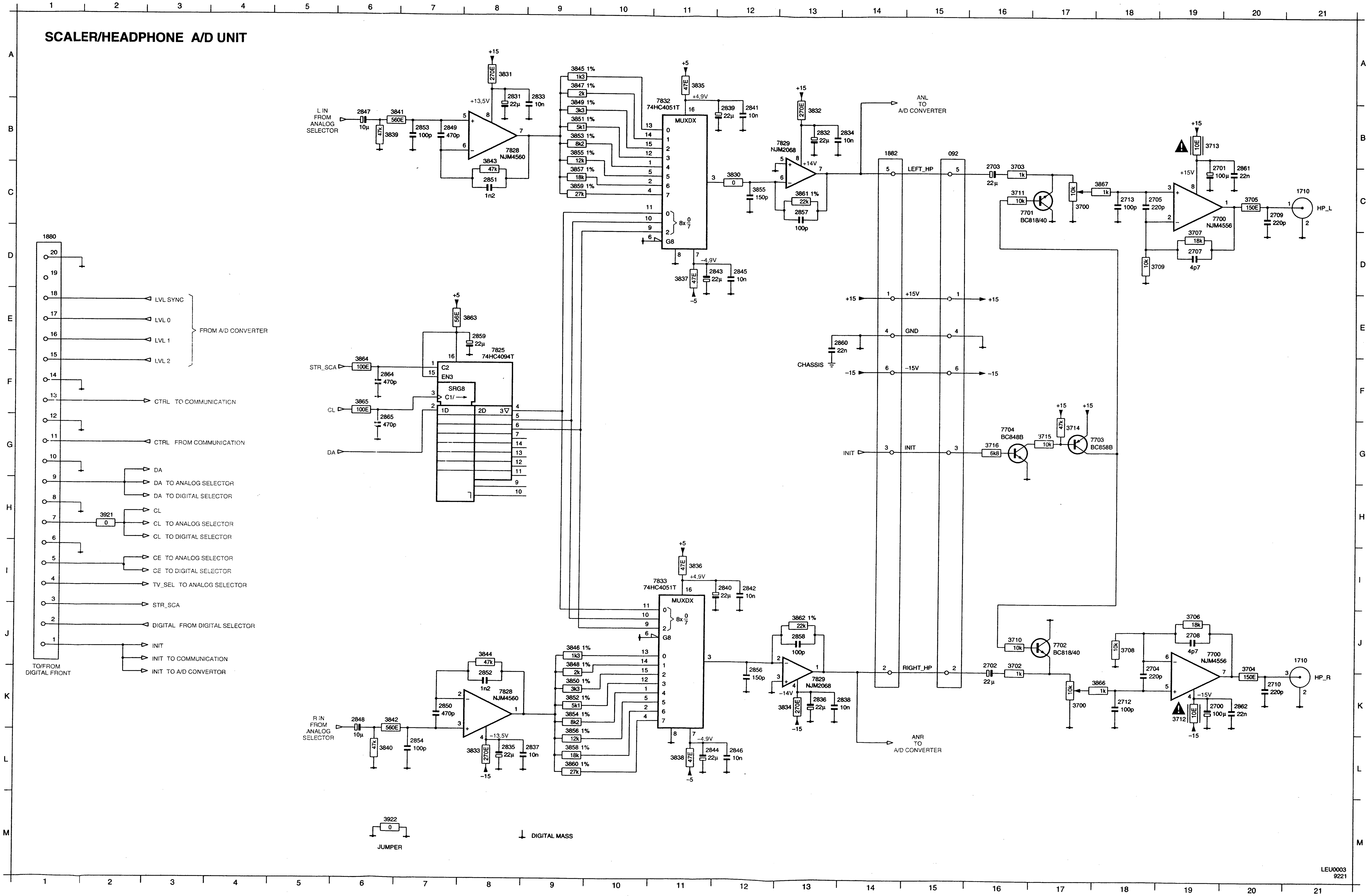

7880

1	= ⊥	15	=+2.4V
2	= -	16	=+2.8V
3	= -	17	=+2.3V
4	=+4.6V	18	=+4.6V
5	=-4.6V	19	= ⊥
6	= -	20	=+2.5V
7	= -	21	=+2.4V
8	=+4.9V	22	=+2.4V
9	= -	23	=+2.4V
10	= -	24	= ⊥
11	= ⊥	25	=+4.6V
12	= ⊥	26	= -
13	=+4.6V	27	= -
14	=+2.3V	28	=-3.5V

7900

1	=+2.5V	9	=+0.5V
2	=+2.4V	10	=+2.6V
3	=+2.8V	11	=+2.5V
4	= ⊥	12	=+4.9V
5	=+4.9V	13	=+2.5V
6	=+4.9V	14	=+4.9V
7	= ⊥	15	=+4.9V
8	= ⊥	16	=+4.9V

7955

1	=-14.9V	15	= -
2	=+1.1V	16	= -
3	=+3.2V	17	=+2.4V
4	=+2.4V	18	=+2.4V
5	=+0.5V	19	= -
6	= -	20	=+2.4V
7	= ⊥	21	=+2.4V
8	= ⊥	22	=+2.4V
9	= ⊥	23	= -
10	=+2.4V	24	=+0.5V
11	=+2.1V	25	=+2.4V
12	=+2.4V	26	=+2.3V
13	= -	27	=+1.1V
14	= ⊥	28	=+14.9V

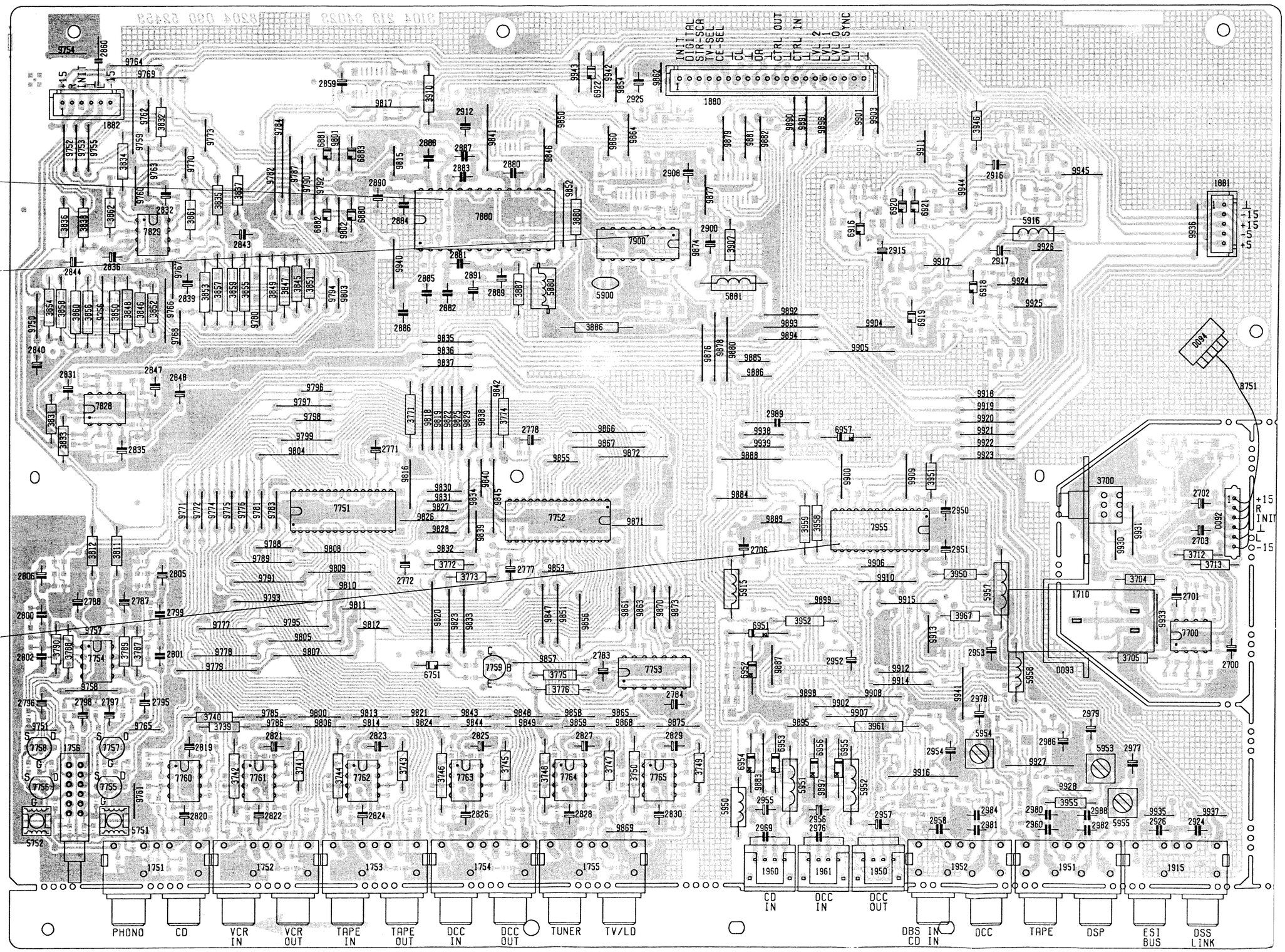

3104 217 29480 PUNT 3

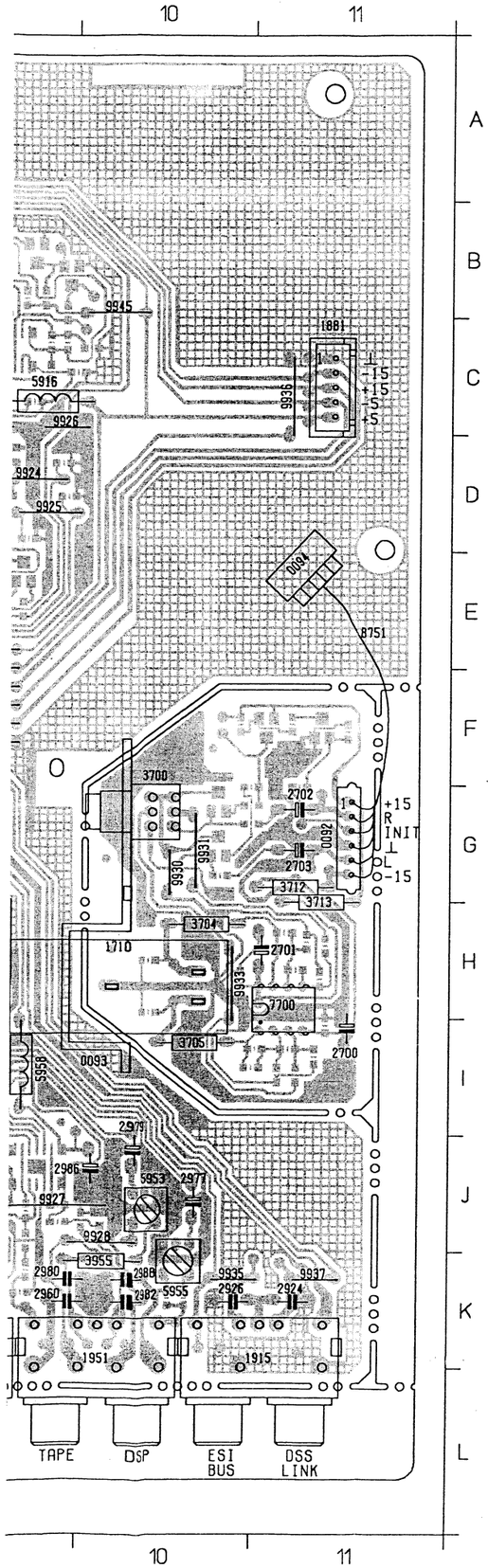

0092	G11	3745	J5	9757	H1	9877	C[illegible]
0093	I10	3746	J4	9758	I1	9878	E7
0094	E11	3747	J6	9759	B2	9879	B7
1710	H10	3748	J5	9760	C2	9880	E7
1751	K2	3749	J6	9761	J2	9881	B7
1752	K3	3750	J6	9762	B2	9882	B7
1753	K4	3771	F4	9763	B2	9883	J7
1754	K5	3772	H4	9764	A2	9884	G7
1755	K6	3773	H4	9765	J2	9885	E7
1756	J1	3774	F5	9766	D2	9886	E7
1880	B7	3775	I5	9767	D2	9887	I7
1881	C11	3776	I5	9768	E2	9888	F7
1882	B1	3787	I2	9769	A2	9889	G7
1915	K11	3788	I1	9770	B2	9890	B7
1950	L8	3789	I2	9771	G2	9891	B7
1951	K10	3790	I1	9772	G2	9892	D7
1952	K9	3811	G1	9773	B2	9893	D7
1960	L7	3812	G1	9774	G2	9894	E7
1961	L8	3831	F1	9775	G2	9895	J7
2700	I11	3832	B2	9776	G3	9896	B8
2701	H11	3833	F1	9777	H2	9897	J8
2702	G11	3834	B2	9778	I2	9898	I7
2703	G11	3835	C2	9779	I2	9899	H8
2706	G7	3836	C1	9780	D3	9900	F8
2771	F4	3837	C3	9781	G3	9901	B8
2772	H4	3838	C1	9782	B3	9902	I8
2777	H5	3845	D3	9783	G3	9903	B8
2778	F5	3846	D2	9784	B3	9904	D8
2783	I6	3847	D3	9785	I3	9905	E8
2784	I6	3848	D2	9786	J3	9906	H8
2787	H2	3849	D3	9787	B3	9907	I8
2788	H1	3850	D1	9788	G3	9908	I8
2795	I2	3851	D3	9789	G3	9909	F8
2796	I1	3852	D2	9790	C3	9910	H8
2797	I1	3853	D2	9791	H3	9911	B8
2798	I1	3854	D1	9792	C3	9912	I8
2799	H2	3855	D3	9793	H3	9913	H8
2800	H1	3856	D1	9794	D3	9914	I8
2801	I2	3857	D2	9795	H3	9915	H8
2802	I1	3858	D1	9796	E3	9916	J8
2805	H2	3859	D2	9797	E3	9917	D9
2806	H1	3860	D1	9798	F3	9918	E9
2819	J2	3861	C2	9799	F3	9919	E9
2820	K2	3862	C1	9800	I3	9920	F9
2821	J3	3880	C5	9801	B3	9921	F9
2822	K3	3886	D6	9802	C3	9922	F9
2823	J4	3887	D5	9803	D3	9923	F9
2824	K4	3907	C7	9804	F3	9924	D9
2825	J5	3910	A4	9805	H3	9925	D9
2826	K5	3946	B9	9806	J3	9926	C9
2827	J5	3950	H9	9807	I3	9927	J9
2828	K5	3951	F8	9808	G3	9928	J10
2829	J6	3952	H7	9809	H3	9930	G10
2830	K6	3955	K10	9810	H3	9931	G10
2831	E1	3958	G7	9811	H4	9933	H10
2832	C2	3959	G7	9812	H4	9935	K10
2835	F2	3961	J8	9813	I4	9936	C11
2836	D1	3967	H9	9814	J4	9937	K11
2839	D2	5751	K2	9815	B4	9938	F7
2840	E1	5752	K1	9816	F4	9939	F7
2843	C3	5880	D5	9817	B4	9940	D4
2844	D1	5881	D7	9818	F4	9941	I9
2847	E2	5900	D6	9819	F4	9942	A6
2848	E2	5915	H7	9820	H4	9943	A5
2859	A3	5916	C9	9821	I4	9944	C9
2860	A1	5950	K7	9822	F4	9945	B10
2880	B5	5951	J7	9823	H4		
2881	D4	5952	J8	9824	J4		
2882	D4	5953	J10	9825	F4		
2883	B4	5954	J9	9826	G4		
2884	C4	5955	K10	9827	G4		
2885	D4	5957	H9	9828	G4		
2886	D4	5958	I9	9829	F4		
2887	B4	6751	I4	9830	G4		
2888	B4	6880	C4	9831	G4		
2889	D5	6881	B3	9832	G4		
2890	C4	6882	C3	9833	H5		
2891	D5	6883	B4	9834	G5		
2900	C7	6916	C8	9835	E4		
2908	B6	6918	D9	9836	E4		
2912	B4	6919	D8	9837	E4		
2915	C8	6920	C8	9838	F5		
2916	B9	6921	C8	9839	G5		
2917	D9	6922	A6	9840	F5		
2924	K11	6951	H7	9841	B5		
2925	A6	6952	I7	9842	E5		
2926	K10	6953	J7	9843	I4		
2950	G9	6954	J7	9844	J5		
2951	G9	6955	J8	9845	G5		
2952	I8	6956	J8	9846	B5		
2953	I9	6957	F8	9847	H5		
2954	J8	7700	H11	9848	I5		
2955	K7	7751	G3	9849	J5		
2956	K7	7752	G5	9850	B5		
2957	K8	7753	I6	9851	H5		
2958	K9	7754	I1	9852	C5		
2960	K9	7755	J1	9853	H5		
2969	K7	7756	J1	9854	A6		
2976	K7	7757	J1	9855	F5		
2977	J10	7758	J1	9856	H6		
2978	I9	7759	I5	9857	I5		
2979	I10	7760	J2	9858	I5		
2980	K9	7761	J3	9859	J5		
2981	K9	7762	J4	9860	B6		
2982	K10	7763	J4	9861	H6		
2984	K9	7764	J5	9862	A6		
2986	J9	7765	J6	9863	H6		
2988	K10	7828	E1	9864	B6		
2989	F7	7829	C2	9865	I6		
3700	F10	7880	C5	9866	F6		
3704	H10	7900	C8	9867	F8		
3705	I10	7955	G8	9868	J6		
3712	G11	8751	E11	9869	K6		
3713	H11	9750	D1	9870	H6		
3739	J2	9751	J1	9871	G6		
3740	J2	9752	B1	9872	F6		
3741	J3	9753	B1	9873	H6		
3742	J2	9754	A1	9874	C6		
3743	J4	9755	B1	9875	J6		
3744	J3	9756	D1	9876	E7		

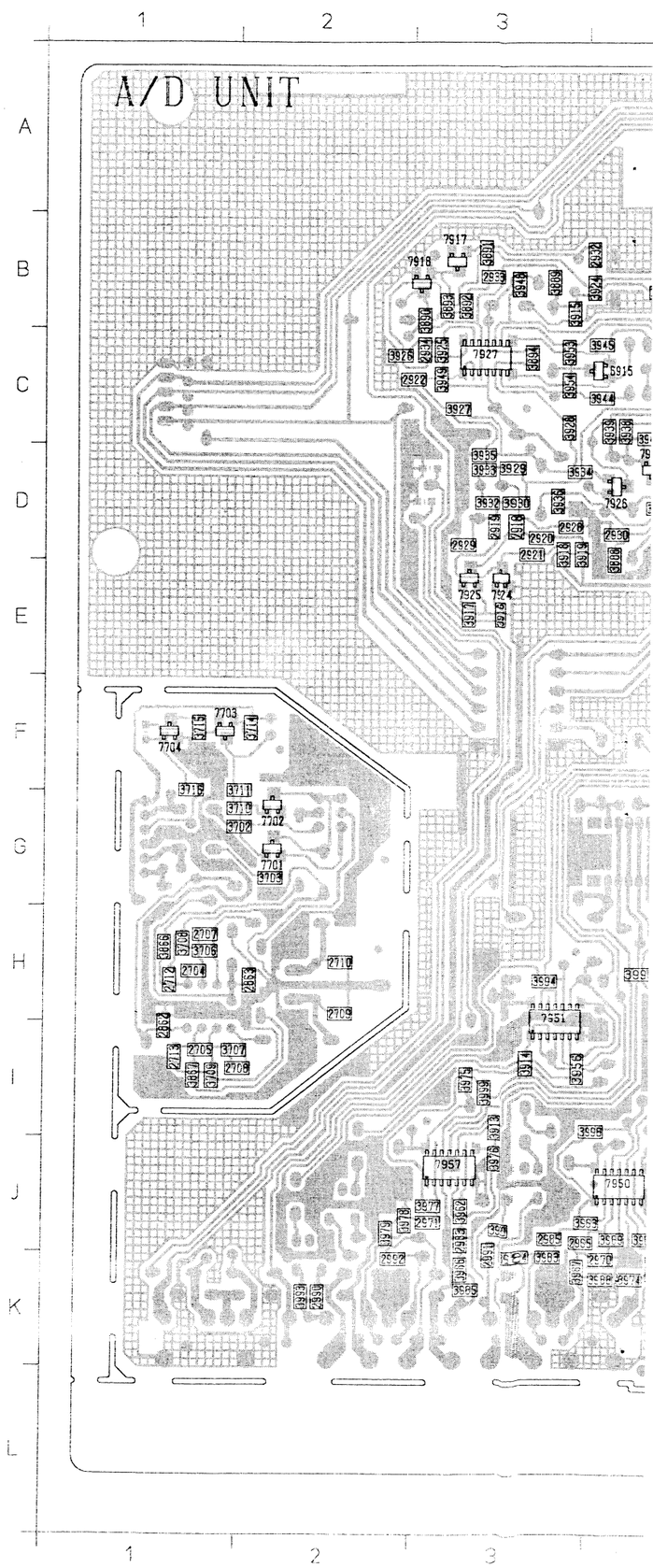

D UNIT

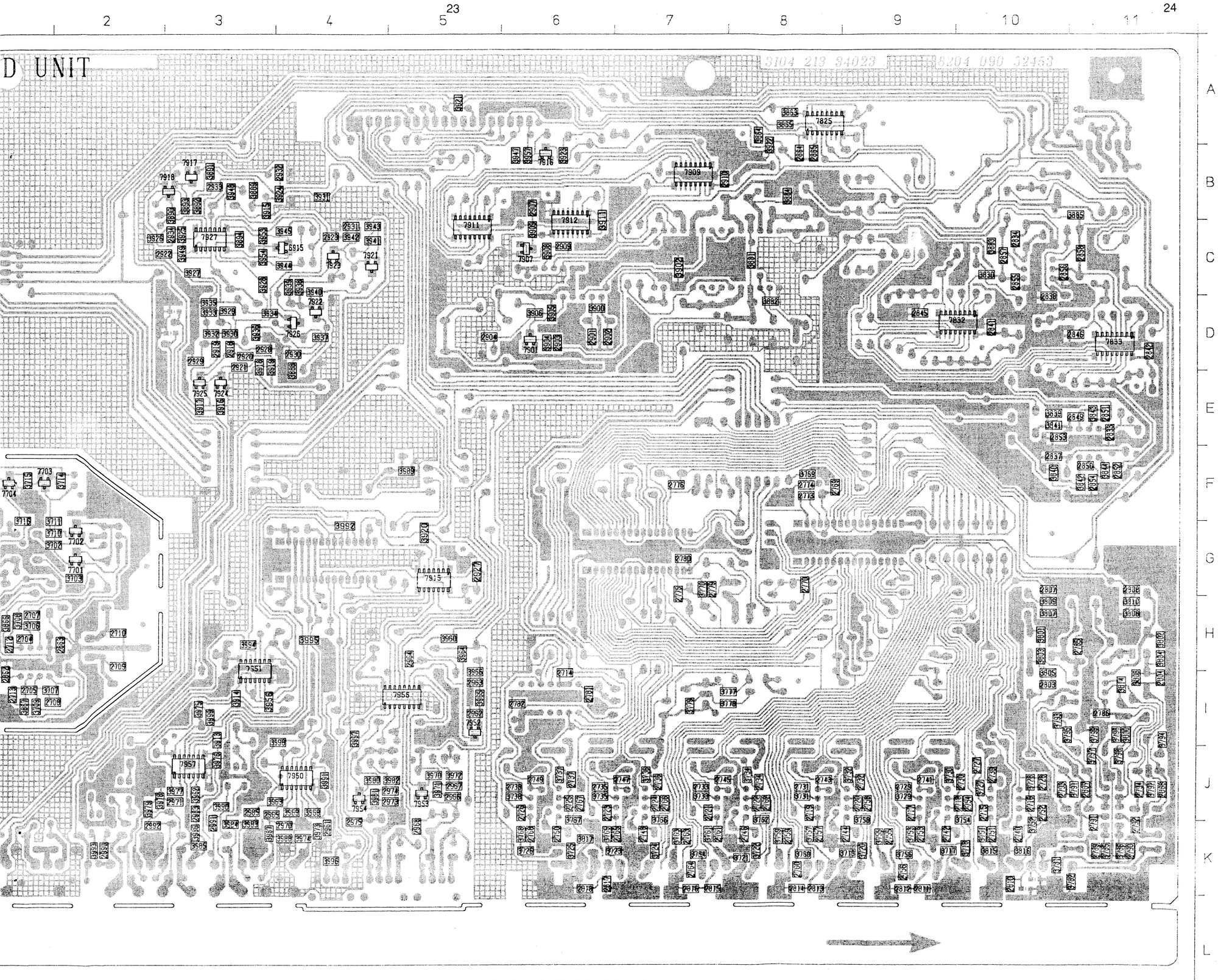

2704					
2705					
2706					
2707					
2708					
2709					
2710					
2711					
2712					
2713					
2714	J8	2992	D3	3856	
2715	J10	2993	D4	3858	
2716	J10	2994	D4	3857	
2717	J9	2995	D4	3861	
2718	J10	2996	D3	3862	
2719	J8	2997	D4	3863	
2720	J9	2998	D4	3864	
2721	J7	2999	B4	3865	B11
2722	J8	2933	B5	3866	
2723	J8	2934	D3	3868	
2724	J7	2961	K4	3890	
2725	J8	2962	H5	3891	
2726	J8	2963	H5	3892	
2727	J10	2964	H5	3893	
2728	J10	2965	J8	3894	
2729	J9	2966	J8	3900	
2730	J10	2967	J8	3902	
2731	J8	2968	K5	3904	
2732	J9	2970	K4	3905	
2733	J7	2971	J9	3906	
2734	J8	2973	J8	3908	
2735	J8	2974	J8	3909	
2736	J7	2975	K4	3911	
2737	J8	2983	J9	3913	
2738	J8	2985	J9	3914	
2739	J10	2990	K2	3915	
2740	K10	2991	K3	3916	
2741	J9	2992	K2	3917	
2742	K9	3705	G2	3918	
2743	J8	3705	G2	3919	
2744	K9	3706	H1	3920	
2745	J7	3707	H1	3921	
2746	K8	3708	H1	3922	
2747	J7	3709	H1	3923	
2748	K7	3710	G2	3924	
2749	J6	3711	G2	3925	
2750	K6	3714	F2	3926	
2751	K10	3715	F1	3927	
2752	J10	3716	G1	3928	
2753	K9	3717	K9	3929	
2754	J10	3718	K10	3930	
2755	K9	3719	K9	3931	
2756	K9	3720	K9	3932	
2757	K8	3721	K8	3933	
2758	J9	3722	K9	3934	
2759	K8	3723	K8	3935	
2760	K8	3724	K7	3936	
2761	K7	3725	K8	3937	
2762	J8	3726	K8	3938	
2763	K7	3727	J10	3939	
2764	K7	3728	J10	3940	
2765	K7	3729	K8	3941	
2766	J7	3730	J8	3942	
2767	J8	3731	J8	3943	
2768	K8	3732	J8	3944	
2769	F8	3733	G7	3945	
2770	G8	3734	G8	3946	
2773	F9	3735	F8	3947	
2774	F8	3736	F8	3948	
2775	G7	3737	F8	3949	
2776	F7	3738	F8	3950	
2779	G7	3751	K10	3951	
2780	G7	3752	K10	3952	
2781	F6	3753	K9	3953	
2782	F6	3754	K10	3954	
2785	H11	3755	K9	3955	
2786	F11	3756	K9	3956	
2789	K11	3757	K9	3957	
2790	K11	3758	K9	3958	
2791	K11	3759	K9	3959	
2792	K11	3760	K9	3960	
2793	J10	3761	K7	3961	
2794	J11	3762	K8	3962	
2803	F10	3763	K7	3963	
2804	F11	3764	K7	3964	
2807	G10	3765	K8	3965	
2808	G11	3766	K7	3966	
2810	K10	3767	K8	3967	
2811	K9	3768	K8	3968	
2812	K9	3769	F9	3969	
2813	K8	3770	G7	3970	
2814	K8	3777	F8	3980	
2815	K7	3778	F8	3981	
2816	K7	3779	F7	3982	
2817	K8	3781	K10	3983	
2818	K8	3782	K11	3984	
2833	E11	3783	K11	3985	
2834	D10	3784	K11	3986	
2837	F10	3785	K11	3987	
2838	D10	3786	K11	3988	
2841	D10	3787	K11	3989	
2842	D11	3788	K11	3990	
2845	D9	3795	K11	3991	
2846	D11	3796	K11	3992	
2847	E11	3797	K11	3993	
2850	E11	3798	K11	3994	
2851	E11	3799	K11	3995	
2852	F11	3800	K11	3996	
2853	E10	3801	K10	3997	
2854	F11	3802	K11	3998	
2855	C10	3803	K10	3999	
2856	C10	3804	K11	6915	
2857	C10	3805	K10	7701	
2858	C11	3806	K10	7702	
2862	F3	3807	K10	7703	
2863	K2	3808	K11	7704	
2864	B8	3809	K10	7825	
2865	B8	3810	K10	7826	
2867	J11	3814	K10	7827	
2868	K11	3815	K10	7828	
2901	B8	3816	K10	7829	
2902	B8	3817	K5	7830	
2903	B8	3818	K10	7831	

1950	F19	1952	I1	2927	M15	2955	K2	2962	E14	2968	K2	2974	F4	2980	I19	2986	M15
1951	I19	1952	H1	2950	N15	2956	E2	2963	E14	2969	L2	2975	E2	2981	D2	2988	D19
1951	C19	1952	C1	2951	J15	2957	F20	2964	E12	2970	J3	2976	F2	2982	B2	2989	M2
1951	F1	1960	K1	2952	L15	2958	J2	2965	H3	2971	B3	2977	D3	2983	G3	2990	D18
1951	B1	1961	E1	2953	K15	2960	G2	2966	L4	2972	B3	2978	G3	2984	G19	2991	G18
1952	G19	2706	M15	2954	K15	2961	I3	2967	L4	2973	F4	2979	H3	2985	C3	2992	I18

3914	G16	3956	I17	3964	D15	3970	K5	3977	B4	3983	C2	3989	M3	3995	N17
3920	B14	3958	M2	3965	E14	3971	K4	3978	B2	3984	D2	3990	G18	3996	E19
3950	I14	3959	L2	3966	E13	3972	L3	3979	B2	3985	G2	3991	G17	3997	N18
3951	N14	3960	D16	3967	I15	3973	I2	3980	E5	3986	G2	3992	B5	5915	M14
3952	L14	3962	G4	3968	J4	3974	J2	3981	E4	3987	H2	3993	D18	5950	K1
3955	I18	3963	D4	3969	H4	3975	G15	3982	F3	3988	H2	3994	C17	5951	E1

5952	E20	5958	L14	6956	F3	7915	B13	7950	I4	7951	C17	7956	I6	7957	F4
5953	I19	6951	E13	6957	M3	7915	A13	7950	H4	7951	F17	7956	C6	7957	B4
5954	G19	6952	E13	7915	I7	7950	C5	7951	I16	7952	E15	7956	C16	7957	F4
5955	D19	6953	K3	7915	C7	7950	I4	7951	H16	7953	K5	7957	B5		
5956	K14	6954	L3	7915	J12	7950	H4	7951	G16	7954	E5	7957	K7		
5957	K14	6955	E3	7915	B12	7950	C4	7951	C17	7955	A11	7957	K7		

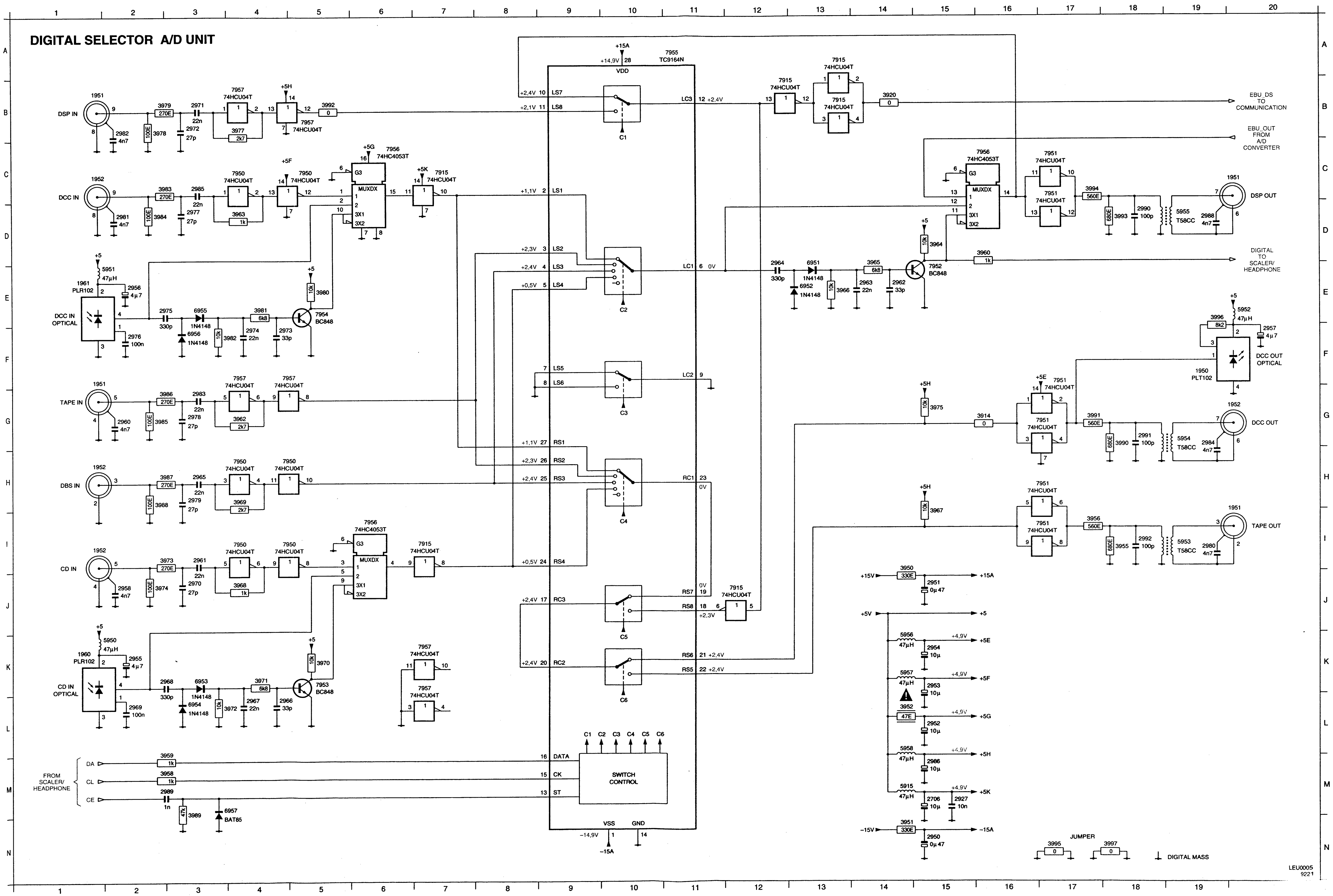

1881 K2 2881 J4 2883 B6 2885 D4 2887 E4 2889 L3 2891 J3 2901 M16 2903 J12 2907 J4 2909 B12 2912 I3 3882 D4 3884 E4 3886 J3 3900 L15 3904 I12 3906 J18 3908 B12 3910 I3 5880 A10 5900 M15 6881 E3 6883 E3 7900 I14 7907 B13 7909 C15 7912 C17
2880 B10 2882 J4 2884 C4 2886 D3 2888 E3 2890 C4 2900 H3 2902 M15 2904 J18 2908 J3 2910 I4 3881 B6 3883 C2 3885 E2 3887 L3 3902 M6 3905 I13 3907 I3 3909 B13 3911 C15 5881 H3 6880 D3 6882 C3 7880 B7 7901 J13 7909 F14 7911 F17

A/D CONVERTER A/D UNIT

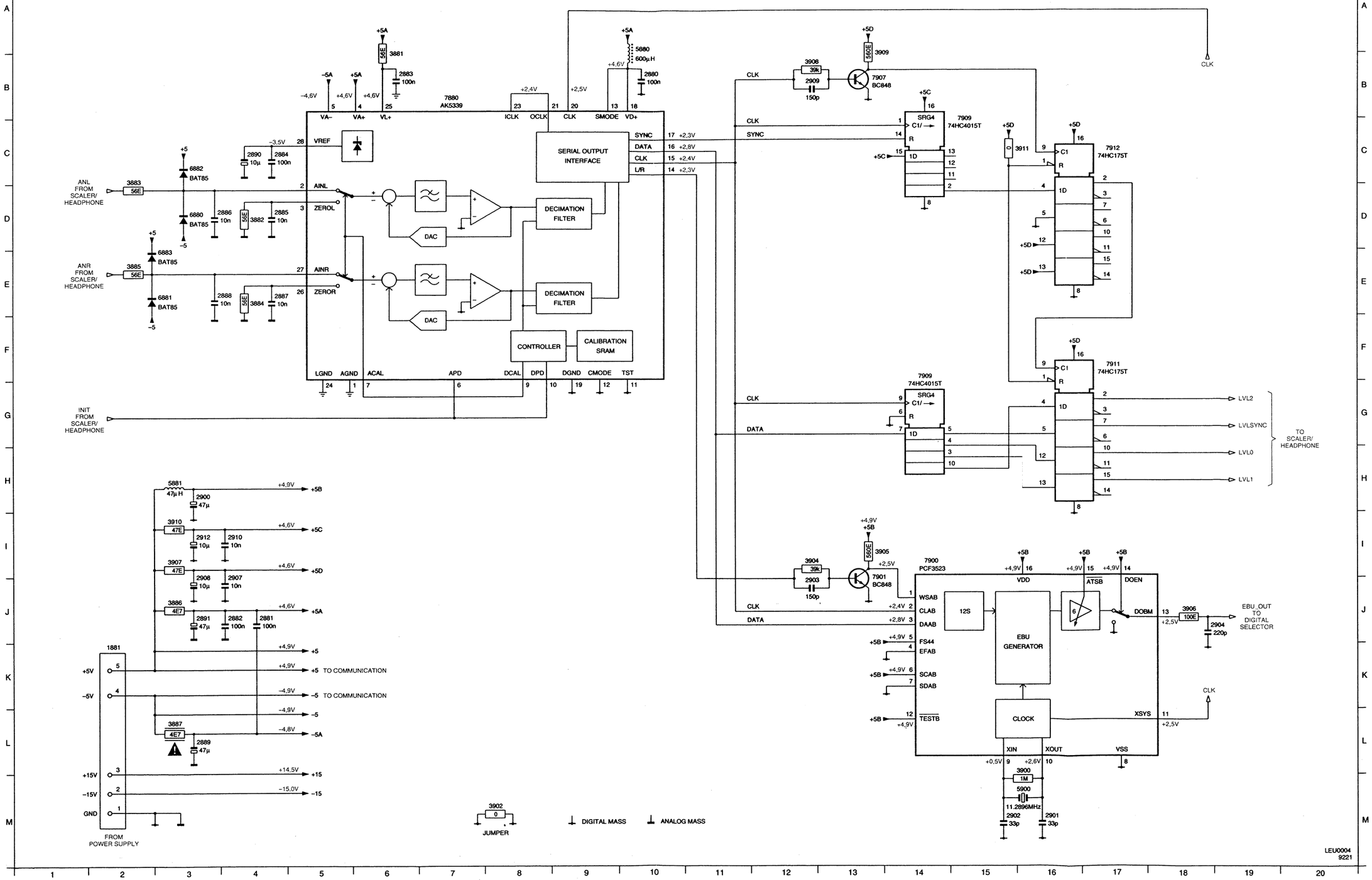

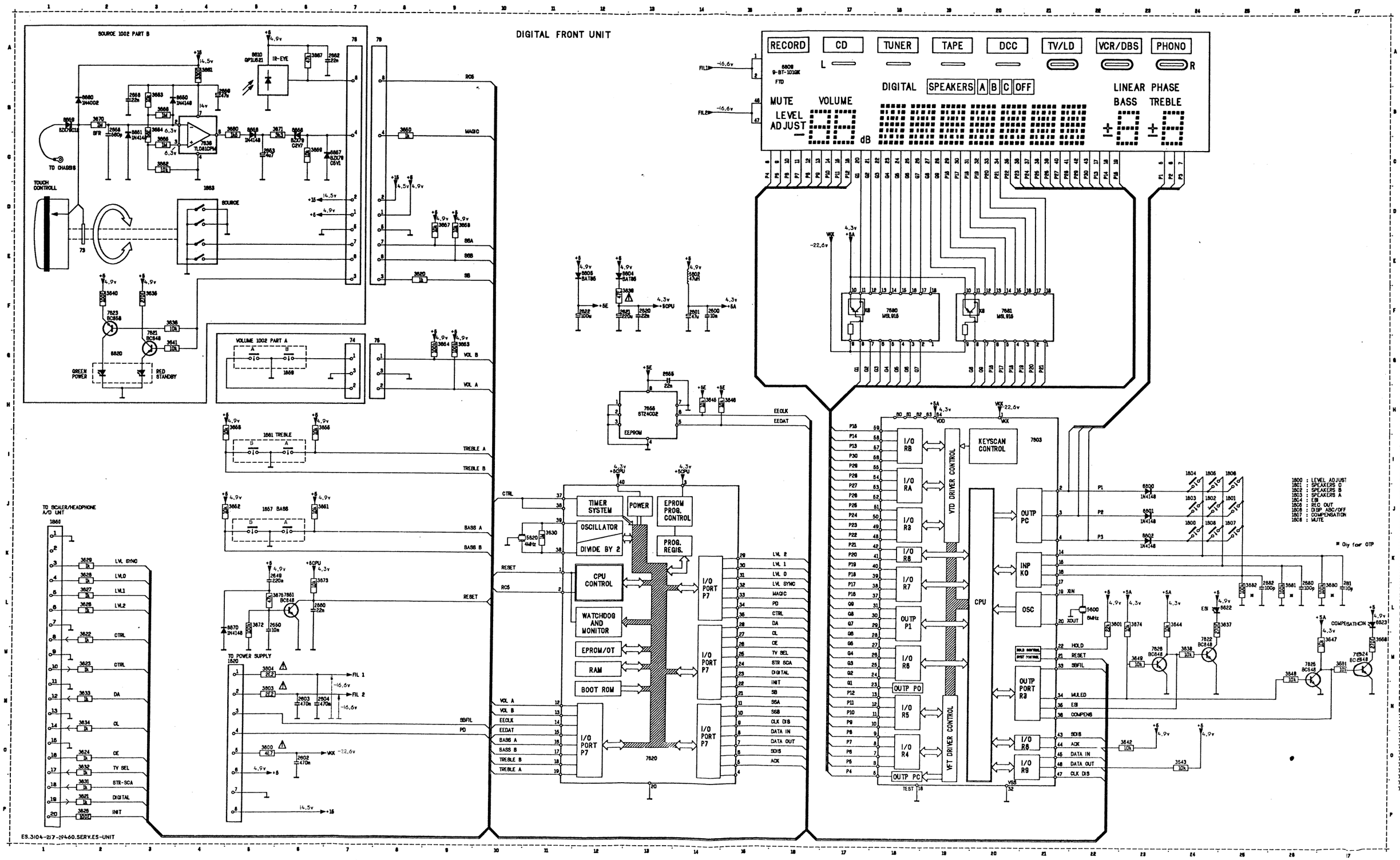
DIGITAL FRONT UNIT
SOURCE 1002 PART B
IR-EYE
TO CHASSIS
TOUCH CONTROLL
SOURCE
VOLUME 1002 PART A
1861 TREBLE
1857 BASS
TO SCALER/HEADPHONE A/D UNIT
TO POWER SUPPLY
GREEN POWER
RED STANDBY
RC5
MAGIC
SSA
SSB
SB
VOL B
VOL A
TREBLE A
TREBLE B
BASS A
BASS B
RESET
SBFIL
PD
LVL SYNC
LVL0
LVL1
LVL2
CTRL
DA
CL
CE
TV SEL
STR-SCA
DIGITAL
INIT
EECLK
EEDAT
EEPROM
TIMER SYSTEM
POWER
EPROM PROG. CONTROL
OSCILLATOR
DIVIDE BY 2
PROG. REGIS.
CPU CONTROL
WATCHDOG AND MONITOR
EPROM/OT
RAM
BOOT ROM
I/O PORT P7
DATA IN
DATA OUT
SDIS
CLK DIS
ACK
RECORD
CD
TUNER
TAPE
DCC
TV/LD
VCR/DBS
PHONO
DIGITAL
SPEAKERS A B C OFF
LINEAR PHASE
BASS TREBLE
MUTE
VOLUME
LEVEL ADJUST
dB
KEYSCAN CONTROL
VFT DRIVER CONTROL
CPU
OUTP PC
INP KO
OSC
OUTP PORT R3
I/O R6
I/O R9
HOLD
RESET
SBFIL
MULED
ESI
COMPENS
COMPESATION
1800 : LEVEL ADJUST
1801 : SPEAKERS C
1802 : SPEAKERS B
1803 : SPEAKERS A
1804 : ESI
1805 : REC OUT
1806 : DSP ABC/OFF
1807 : COMPENSATION
1808 : MUTE
* Only for OTP
ES.3104-217-29460.SERV.ES-UNIT

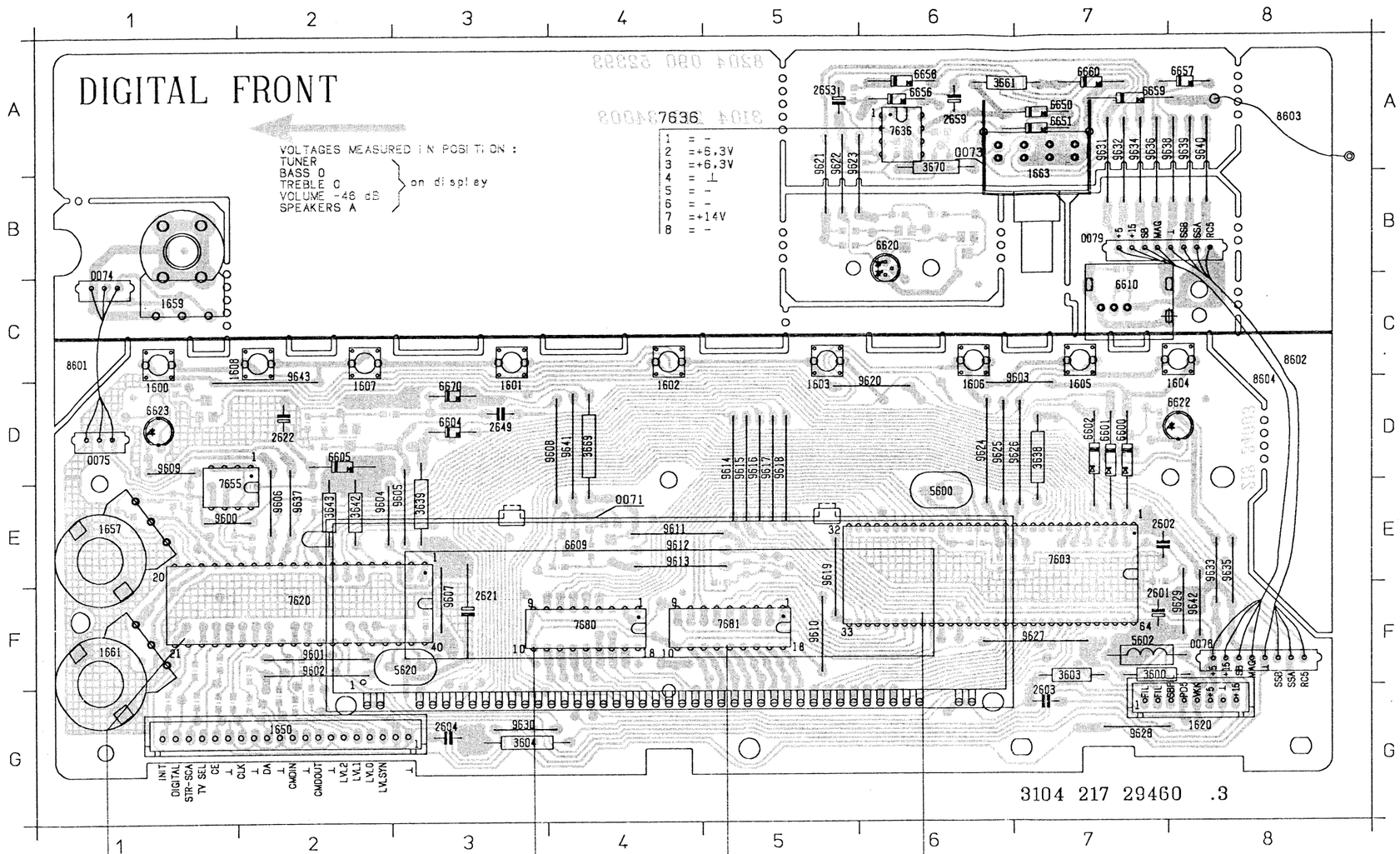

1 =+4,5V	11 =+4,8V	21 = -	31 = -
2 =+4,7V	12 =+3,9V	22 =+4,3V	32 =+2,3V
3 =+4,4V	13 =+3,9V	23 =+4,7V	33 = -
4 =+2,2V	14 =+4,4V	24 = -	34 =+4,9V
5 =+4,4V	15 =+4,4V	25 =+4,3V	35 = -
6 =+2,8V	16 =+4,8V	26 = -	36 = -
7 =+0,3V	17 =+4,8V	27 = -	37 = -
8 =+3,1V	18 =+4,8V	28 = -	38 =+1,8V
9 =+4,3V	19 =+4,8V	29 = -	39 = -
10 = -	20 = ⊥	30 = -	40 =+4,4V

7620

1 =+2,1V	10 =+4,9V
2 =+2,1V	11 =-18V
3 =+1,6V	12 ==-18V
4 =+2,4V	13 =-7,0V
5 =+1,2V	14 =-2,7V
6 =+2,1V	15 =-9,3V
7 =+3,7V	16 =-4,8V
8 =+3,7V	17 =-7,2V
9 =-22,5V	18 =-7,2V

7680

1 =+2,1V	10 =+4,9V
2 =+2,1V	11 =-18V
3 =+1,6V	12 ==-18V
4 =+2,4V	13 =-7,0V
5 =+1,2V	14 =-2,7V
6 =+2,1V	15 =-9,3V
7 =+3,7V	16 =-4,8V
8 =+3,7V	17 =-7,2V
9 =-22,5V	18 =-7,2V

7681

1 =-22,8V	14 = -	27 =+3,7V	40 =+1,2V	53 =-5,6V
2 =-18,5V	15 = -	28 =+3,7V	41 =+2,5V	54 =-5,6V
3 =-18,5V	16 = -	29 =+3,7V	42 =+2,1V	55 =-8,3V
4 =-21,5V	17 = -	30 =+3,7V	43 =+0,1V	56 =-5,6V
5 =-13,0V	18 = -	31 =+3,7V	44 =+4,4V	57 =-18,5V
6 =-18,5V	19 = -	32 = -	45 =+0,2V	58 =-15,5V
7 =-18,5V	20 =+2,4V	33 = -	46 = -	59 =-8,3V
8 =-21,5V	21 =+4,6V	34 = -	47 =+4,1V	60 =-21,5V
9 =-21,5V	22 =+4,6V	35 = -	48 =-5,6V	61 =-21,5V
10 =-21,5V	23 =+3,7V	36 = -	49 =-18,5V	62 =-21,5V
11 =-6V	24 =+3,7V	37 =+2,0V	50 =-18,5V	63 =-21,5V
12 =-6V	25 =+3,7V	38 =+1,2V	51 =-12,5V	64 =+4,9V
13 =-3,4V	26 =+3,7V	39 =+2,4V	52 =-12,5V	

7603

0071	E4	1620	G8	9601	F2	9628	G7
0073	A6	1650	G2	9602	F2	9629	F8
0074	C1	1657	E1	9603	D7	9630	G3
0075	D1	1659	C1	9604	E2	9631	A7
0078	F8	1661	F1	9605	E3	9632	A7
0079	B7	1663	B7	9606	E2	9633	E8
1600	D1	2601	F7	9607	F3	9634	A7
1601	D3	2602	E7	9608	D4	9635	E8
1602	D4	2603	G7	9609	D1	9636	A7
1603	D5	2604	G3	9610	F5	9637	E2
1604	D8	2621	F3	9611	E4	9638	A8
1605	D7	2622	D2	9612	E4	9639	A8
1606	D6	2649	D3	9613	E4	9640	A8
1607	D2	2653	A5	9614	D5	9641	D4
1608	C2	2659	A6	9615	D5	9642	F8
1620	G8	3600	F7	9616	D5	9643	D2
1650	G2	3603	F7	9617	D5		
1657	E1	3604	G3	9618	D5		
1659	C1	3638	D7	9619	E5		
1661	F1	3639	E3	9620	D6		
1663	B7	3642	E2	9621	A5		
2601	F7	3643	E2	9622	A5		
2602	E7	3661	A6	9623	A5		
2603	G7	3669	D4	9624	D6		
2604	G3	3670	A6	9625	D6		
2621	F3	5600	E6	9626	D7		
2622	D2	5602	F7	9627	F7		
2649	D3	5620	F3	9628	G7		
2653	A5	6600	D7	9629	F8		
2659	A6	6601	D7	9630	G3		
3600	F7	6602	D7	9631	A7		
3603	F7	6604	D3	9632	A7		
3604	G3	6605	D2	9633	E8		
3638	D7	6609	E4	9634	A7		
3639	E3	6610	C7	9635	E8		
3642	E2	6620	B6	9636	A7		
3643	E2	6622	D8	9637	E2		
3661	A6	6623	D1	9638	A8		
3669	D4	6650	A7	9639	A8		
3670	A6	6651	A7	9640	A8		
5600	E6	6656	A6	9641	D4		
5602	F7	6657	A8	9642	F8		
5620	F3	6658	A6	9643	D2		
6600	D7	6659	A7				
6601	D7	6660	A7				
6602	D7	6670	D3				
6604	D3	7603	E7				
6605	D2	7620	F2				
6609	E4	7636	A6				
6610	C7	7655	E1				
6620	B6	7680	F4				
6622	D8	7681	F5				
6623	D1	8601	C1				
6650	A7	8602	C8				
6651	A7	8603	A8				
6656	A6	8604	D8				
6657	A8	9600	E1				
6658	A6	9601	F2				
6659	A7	9602	F2				
6660	A7	9603	D7				
6670	D3	9604	E2				
7603	E7	9605	E3				
7620	F2	9606	E2				
7636	A6	9607	F3				
7655	E1	9608	D4				
7680	F4	9609	D1				
7681	F5	9610	F5				
8601	C1	9611	E4				
8602	C8	9612	E4				
8603	A8	9613	E4				
8604	D8	9614	D5				
9600	E1	9615	D5				
9601	F2	9616	D5				
9602	F2	9617	D5				
9603	D7	9618	D5				
9604	E2	9619	E5				
9605	E3	9620	D6				
9606	E2	9621	A5				
9607	F3	9622	A5				
9608	D4	9623	A5				
9609	D1	9624	D6				
9610	F5	9625	D6				
9611	E4	9626	D7				
9612	E4	9627	F7				
9613	E4	9628	G7				
9614	D5	9629	F8				
9615	D5	9630	G3				
9616	D5	9631	A7				
9617	D5	9632	A7				
9618	D5	9633	E8				
9619	E5	9634	A7				
9620	D6	9635	E8				
9621	A5	9636	A7				
9622	A5	9637	E2				
9623	A5	9638	A8				
9624	D6	9639	A8				
9625	D6	9640	A8				
9626	D7	9641	D4				
9627	F7	9642	F8				
9628	G7	9643	D2				

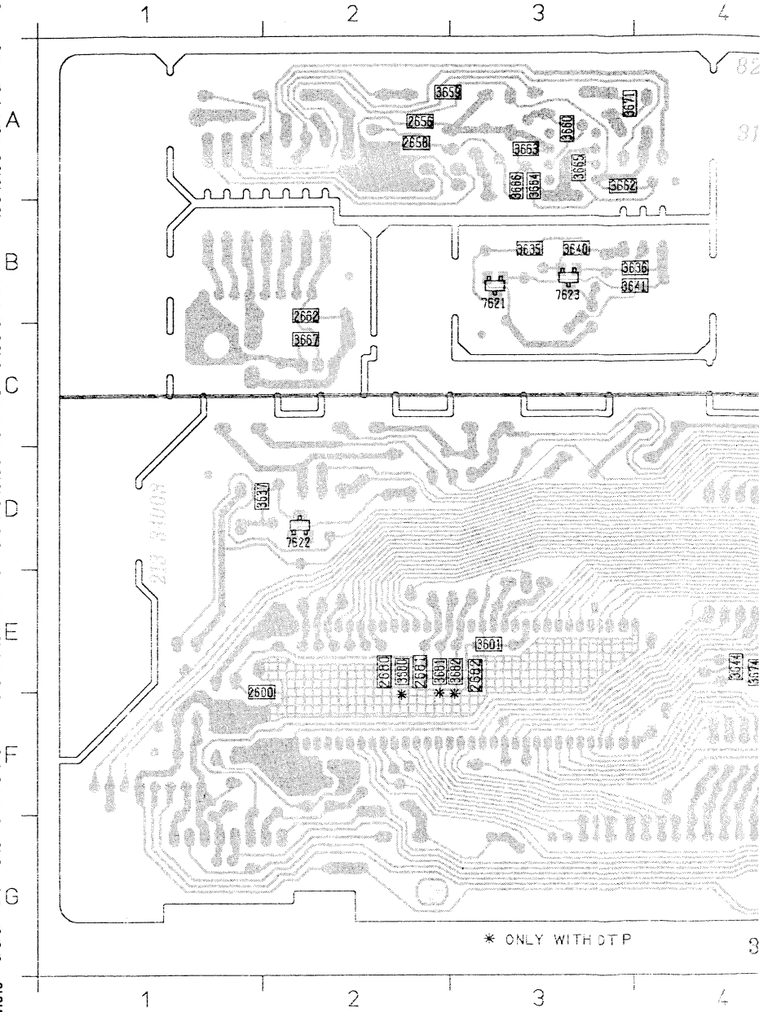

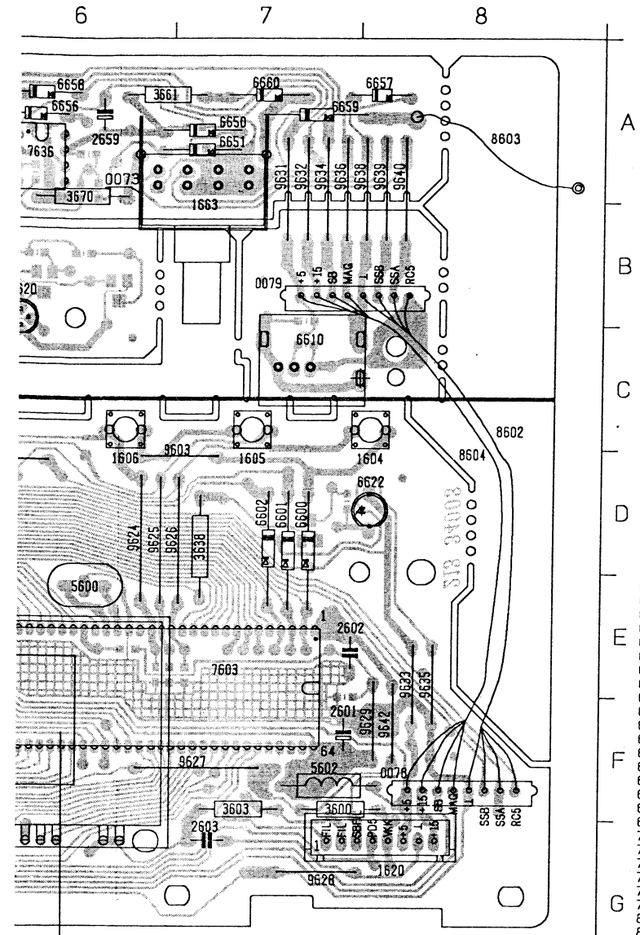

9V	1 =-22,8V	14 = -	27 =+3,7V	40 =+1,2V	53 =-5,6V
V	2 =-18,5V	15 = -	28 =+3,7V	41 =+2,5V	54 =-5,6V
8V	3 =-18,5V	16 = -	29 =+3,7V	42 =+2,1V	55 =-8,3V
0V	4 =-21,5V	17 = -	30 =+3,7V	43 =+0,1V	56 =-5,6V
7V	5 =-13,0V	18 = -	31 =+3,7V	44 =+4,4V	57 =-18,5V
3V	6 =-18,5V	19 = -	32 = -	45 =+0,2V	58 =-15,5V
8V	7 =-18,5V	20 =+2,4V	33 = -	46 = -	59 =-8,3V
2V	8 =-21,5V	21 =+4,6V	34 = -	47 =+4,1V	60 =-21,5V
2V	9 =-21,5V	22 =+4,6V	35 = -	48 =-5,6V	61 =-21,5V
	10 =-21,5V	23 =+3,7V	36 = -	49 =-18,5V	62 =-21,5V
	11 =-6V	24 =+3,7V	37 =+2,0V	50 =-18,5V	63 =-21,5V
	12 =-6V	25 =+3,7V	38 =+1,2V	51 =-12,5V	64 =+4,9V
	13 =-3,4V	26 =+3,7V	39 =+2,4V	52 =-12,5V	

7603

0071 E4
0073 A6
0074 C1
0075 D1
0078 F8
0079 B7
1600 D1
1601 D3
1602 D4
1603 D5
1604 D8
1605 D7
1606 D8
1607 D2
1608 C2
1620 G8
1650 G2
1657 E1
1659 C1
1661 F1
1663 B7
2301 F7
2602 E7
2603 G7
2604 G3
2621 F3
2622 D2
2649 D3
2653 A5
2659 A6
3600 F7
3603 F7
3604 G3
3638 D7
3639 E3
3642 E2
3643 E2
3661 A6
3669 D4
3670 A6
5600 E6
5602 F7
6320 F3
6500 D7
6601 D7
6602 D7
6604 D3
6605 D2
6609 E4
6610 C7
6620 B6
6622 D8
6623 D1
6650 A7
6651 A7
6656 A6
6657 A8
6658 A6
6659 A7
6660 A7
6670 D3
7603 E7
7620 F2
7636 A6
7655 E1
7680 F4
7681 F5
8601 C1
8602 C8
8603 A8
8604 D8
9600 E1
9601 F2
9602 F2
9603 D7
9604 E2
9605 E3
9606 E2
9607 F3
9608 D4
9609 D1
9610 F5
9611 E4
9612 E4
9613 E4
9614 D5
9615 D5
9616 D5
9617 D5
9618 D5
9619 E5
9620 D8
9621 A5
9622 A5
9623 A5
9624 D8
9625 D8
9626 D7
9627 F7
9628 G7
9629 F8
9630 G3
9631 A7
9632 A7
9633 E8
9634 A7
9635 E8
9636 A7
9637 E2
9638 A8
9639 A8
9640 A8
9641 D4
9642 F8
9643 D2

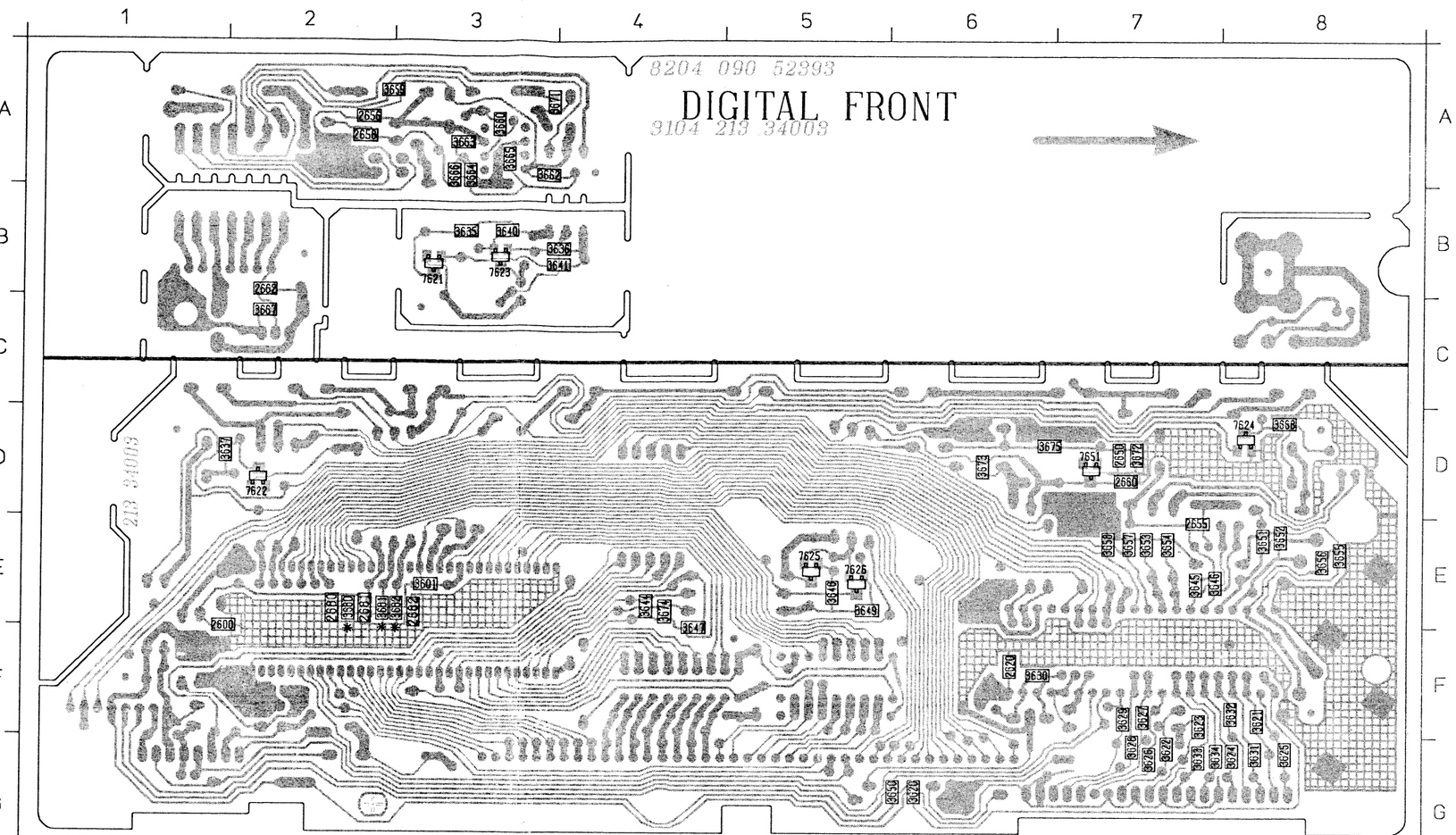

2600 F1
2620 F6
2650 D7
2655 E7
2656 A2
2658 A2
2660 D7
2662 B2
2680 E2
2681 E2
2682 E3
3601 E3
3620 G6
3621 F8
3622 G7
3623 F7
3624 G8
3625 G8
3626 G7
3627 F7
3628 G7
3629 F7
3630 F6
3631 G8
3632 F8
3633 G7
3634 G8
3635 B3
3636 B4
3637 D2
3640 B3
3641 B4
3644 E4
3645 E7
3646 E7
3647 F4
3648 E5
3649 E5
3650 G5
3651 E8
3652 E8
3653 E7
3654 E7
3655 E8
3656 E8
3657 E7
3658 E7
3659 A2
3660 A3
3662 A3
3663 A3
3664 A3
3665 A3
3666 A3
3667 C2
3668 D8
3671 A3
3672 D7
3673 D6
3674 E4
3675 D6
3680 E2
3681 E2
3682 E3
7621 B3
7622 D2
7623 B3
7624 D8
7625 E5
7626 E5
7651 D7

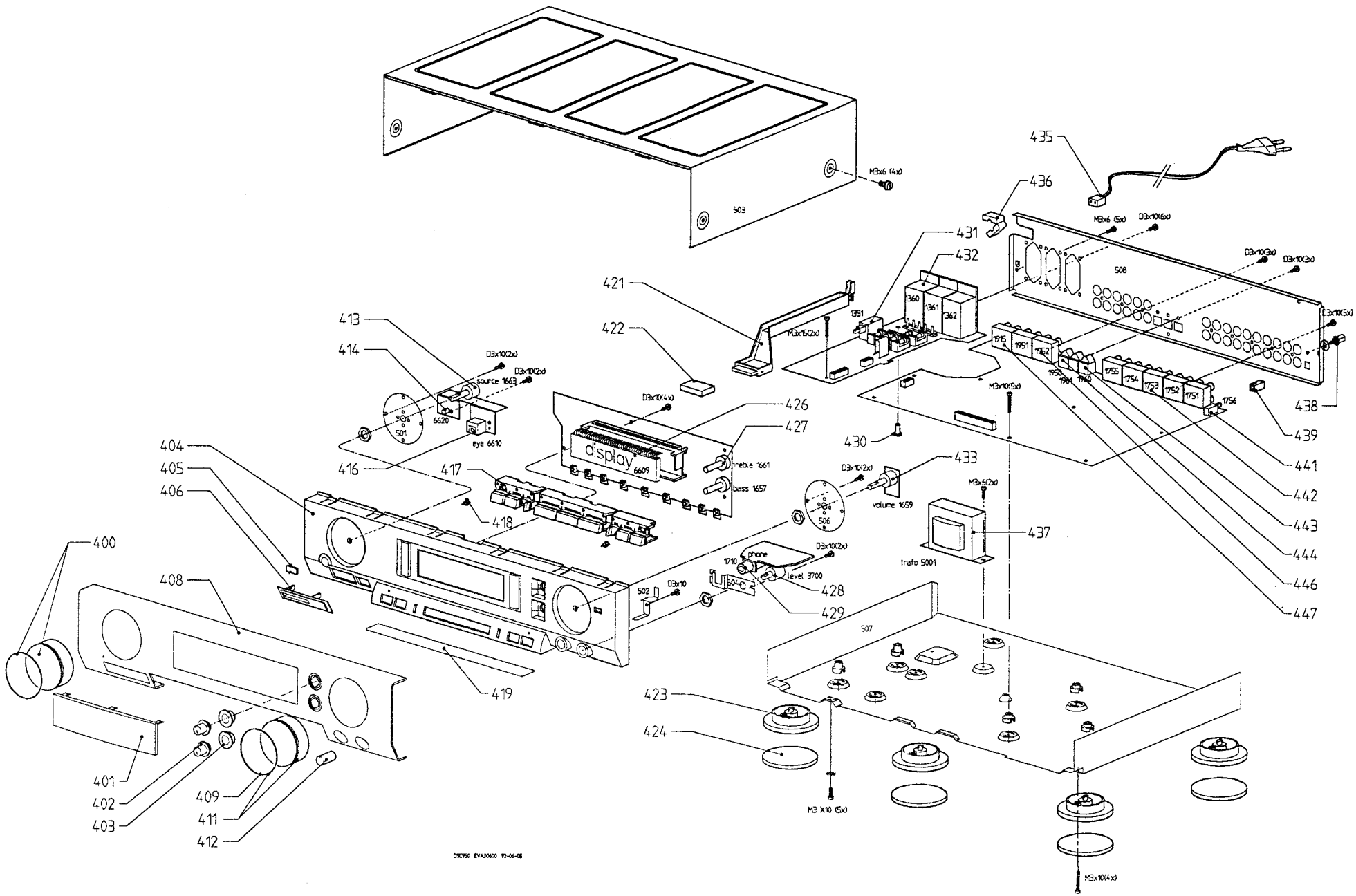

400
401
402
403
404
405
406
408
409
411
412
413
414
416
417
418
419
421
422
423
424
426
427
428
429
430
431
432
433
435
436
437
438
439
441
442
443
444
446
447
M3x6 (4x)
503
M3x6 (5x)
D3x10(6x)
D3x10(3x)
D3x10(5x)
508
1360
1361
1362
1351
M3x15(2x)
1915
1951
1952
1950
1961
1960
1755
1754
1753
1752
1751
1756
M3x10(5x)
D3x10(2x)
source 1663
6620
501
eye 6610
D3x10(4x)
display
6609
treble 1661
bass 1657
D3x10(2x)
volume 1659
506
M3x6(2x)
trafo 5001
phone
1710
level 3700
504
502
D3x10
507
M3 X10 (5x)
M3x10(4x)

MECHANICAL PARTS

400	4822 410 61699	KNOB ASSY
401	4822 450 61837	WINDOW ASSY
402	4822 413 31711	KNOB ASSY
403	4822 532 52478	BEARING RING
404	4822 426 51575	FRONT ASSY
405	4822 380 20438	LED REFLECTOR ASSY
406	4822 450 61891	IR - WINDOW
408	4822 426 51574	ALUM FRONT ASSY
409	4822 532 21449	RUBBER RING
411	4822 413 51426	KNOB ASSY
412	4822 410 61705	KNOB ASSY
413	4822 273 20369	ROT.ENCODER
414	4822 209 72895	LED
416	4822 214 51772	IR EYE
417	4822 410 62143	BUTTONS ASSY
418	4822 380 20425	LED REFLECTOR
419	4822 454 12847	ORNAMENTAL PLATE
421	4822 404 21248	POWER ROD
422	4822 462 71808	POWER CAP
423	4822 462 41888	FOOT
424	4822 462 41887	FOOT FELT
426	4822 130 91154	DISPLAY
427	4822 101 11223	ROT.ENCODER
428	4822 101 21199	POT 2x10k 20% 0,025W
429	4822 267 31453	PHONE SOCKET
430	4822 532 21463	SPACER LOCKING 10MM
431	4822 276 13224	POWER SWITCH
432	4822 265 20594	CON.SUPPLY AC
432	4822 265 30998	CON.SUPPLY AC /05
432	4822 265 30999	CON.SUPPLY AC /17
433	4822 101 11224	ROT.ENCODER
435	4822 321 10791	CORD SET
435	4822 321 10867	CORD SET /05
435	4822 321 10825	CORD SET /17
436	4822 532 60948	BUSH
437	4822 146 31162	MAINS TRAFO
438	4822 502 13921	PHONO SCREW
439	4822 410 61963	BUTTON CAP
441	4822 276 13297	SWITCH
442	4822 265 30995	SOCKET
443	4822 212 23837	IR LINK TRANSM.
444	4822 218 21019	IR LINK TRANSM.
446	4822 265 30996	SOCKET
447	4822 265 30997	SOCKET
	4822 218 10476	RH6621/01
	4822 736 21496	I.F.U DSC950

NOTES

MISCELLANEOUS

71	4822 256 91897	DISPLAY HOLDER
1052	4822 070 34001	FUSE T 400MA
1052	4822 253 50076	FUSE T 400MA /17
1053	4822 070 34001	FUSE T 400MA
1053	4822 253 50076	FUSE T 400MA /17
1054	4822 070 34001	FUSE T 400MA
1054	4822 253 50076	FUSE T 400MA /17
1055	4822 070 34001	FUSE T 400MA
1055	4822 253 50076	FUSE T 400MA /17
1068	4822 070 31002	FUSE T 1A
1351	4822 276 13224	POWER SWITCH
1356	4822 256 30274	FUSE HOLDER
1357	4822 256 30274	FUSE HOLDER
1358	4822 256 30274	FUSE HOLDER
1359	4822 256 30274	FUSE HOLDER
1360	4822 265 20594	CON.SUPPLY AC
1360	4822 265 30998	CON.SUPPLY AC /05
1360	4822 265 30999	CON.SUPPLY AC /17
1361	4822 265 20594	CON.SUPPLY AC
1361	4822 265 30998	CON.SUPPLY AC /05
1362	4822 265 20594	CON.SUPPLY AC
1362	4822 265 30998	CON.SUPPLY AC /05
1366	4822 265 30994	5 CONNECTOR 5P
1369	4822 256 30274	FUSE HOLDER
1600	4822 276 13213	TACT SWITCH
1601	4822 276 13213	TACT SWITCH
1602	4822 276 13213	TACT SWITCH
1603	4822 276 13213	TACT SWITCH
1604	4822 276 13213	TACT SWITCH
1605	4822 276 13213	TACT SWITCH
1606	4822 276 13114	TACT SWITCH
1607	4822 276 13114	TACT SWITCH
1608	4822 276 13213	TACT SWITCH
1657	4822 101 11223	ROT.ENCODER
1659	4822 101 11224	ROT.ENCODER
1661	4822 101 11223	ROT.ENCODER
1663	4822 273 20369	ROT.ENCODER
1710	4822 267 31453	PHONE SOCKET
1751	4822 265 30995	SOCKET
1752	4822 265 30995	SOCKET
1753	4822 265 30995	SOCKET
1754	4822 265 30995	SOCKET
1755	4822 265 30995	SOCKET
1756	4822 276 13297	SWITCH
1915	4822 265 30997	SOCKET
1950	4822 218 21019	IR LINK TRANSM.
1951	4822 265 30996	SOCKET
1952	4822 265 30996	SOCKET
1960	4822 212 23837	IR LINK TRANSM.
1961	4822 212 23837	IR LINK TRANSM.

CAPACITORS

2351	4822 121 43526	47nF 5% 100V
2352	4822 121 43526	47nF 5% 100V
2353	4822 121 43526	47nF 5% 100V
2354	4822 121 43526	47nF 5% 100V
2355	4822 124 80047	1000µF 20% 35V
2356	4822 122 10166	22nF 30% 16V
2357	4822 124 80047	1000µF 20% 35V
2358	4822 122 10166	22nF 30% 16V
2359	4822 124 80148	2200µF 20% 16V
2360	5322 121 42386	100nF 5% 63V
2361	4822 124 40196	220µF 20% 16V
2362	4822 122 10166	22nF 30% 16V
2363	5322 124 22094	220µF 20% 50V
2364	4822 124 41799	220µF 63V
2365	4822 122 10158	1nF 10% 50V
2366	4822 124 41576	2,2µF 20% 50V
2600	4822 122 33177	10nF 20% 50V
2601	4822 124 40433	47µF 20% 25V
2602	4822 121 51252	470nF 5% 63V
2603	4822 121 51252	470nF 5% 63V
2604	4822 121 51252	470nF 5% 63V
2620	5322 122 32654	22nF 10% 63V
2621	4822 124 22428	220µF 20% 10V
2622	4822 124 41584	100µF 20% 10V
2649	4822 121 42408	220nF 5% 63V
2650	4822 122 33177	10nF 20% 50V
2653	4822 124 41577	4,7µF 20% 50V
2655	5322 122 32654	22nF 10% 63V
2656	5322 122 32654	22nF 10% 63V
2658	5322 116 80853	560pF 5% 63V
2659	4822 124 40433	47µF 20% 25V
2660	5322 122 32654	22nF 10% 63V
2662	5322 122 32654	22nF 10% 63V
2680	4822 122 31765	100pF 5% 50V
2681	4822 122 31765	100pF 5% 50V
2682	4822 122 31765	100pF 5% 50V
2700	4822 124 41525	100µF 20% 25V
2701	4822 124 41525	100µF 20% 25V
2702	4822 124 41596	22µF 20% 50V
2703	4822 124 41596	22µF 20% 50V
2704	4822 122 32575	220pF 10% 500V
2705	4822 122 32575	220pF 10% 500V
2706	4822 124 40435	10µF 20% 50V
2707	5322 122 32287	4,7pF 5% 50V
2708	5322 122 32287	4,7pF 5% 50V
2709	5322 122 34123	1nF 10% 50V
2710	5322 122 34123	1nF 10% 50V
2712	5322 122 32531	100pF 5% 50V
2713	5322 122 32531	100pF 5% 50V
2714	5322 122 34123	1nF 10% 50V

2715	5322 122 34099	470pF 10% 63V
2716	5322 122 34099	470pF 10% 63V
2717	5322 122 34099	470pF 10% 63V
2718	5322 122 34099	470pF 10% 63V
2719	5322 122 34099	470pF 10% 63V
2720	5322 122 34099	470pF 10% 63V
2721	5322 122 34099	470pF 10% 63V
2722	5322 122 34099	470pF 10% 63V
2723	5322 122 34099	470pF 10% 63V
2724	5322 122 34099	470pF 10% 63V
2725	5322 122 34099	470pF 10% 63V
2726	5322 122 34099	470pF 10% 63V
2727	5322 122 32481	15pF 5% 50V
2728	5322 122 32481	15pF 5% 50V
2729	5322 122 32481	15pF 5% 50V
2730	5322 122 32481	15pF 5% 50V
2731	5322 122 32481	15pF 5% 50V
2732	5322 122 32481	15pF 5% 50V
2733	5322 122 32481	15pF 5% 50V
2734	5322 122 32481	15pF 5% 50V
2735	5322 122 32481	15pF 5% 50V
2736	5322 122 32481	15pF 5% 50V
2737	5322 122 32481	15pF 5% 50V
2738	5322 122 32481	15pF 5% 50V
2739	5322 122 32654	22nF 10% 63V
2740	5322 122 32654	22nF 10% 63V
2741	5322 122 32654	22nF 10% 63V
2742	5322 122 32654	22nF 10% 63V
2743	5322 122 32654	22nF 10% 63V
2744	5322 122 32654	22nF 10% 63V
2745	5322 122 32654	22nF 10% 63V
2746	5322 122 32654	22nF 10% 63V
2747	5322 122 32654	22nF 10% 63V
2748	5322 122 32654	22nF 10% 63V
2749	5322 122 32654	22nF 10% 63V
2750	5322 122 32654	22nF 10% 63V
2751	5322 122 32531	100pF 5% 50V
2752	5322 122 32531	100pF 5% 50V
2753	5322 122 32531	100pF 5% 50V
2754	5322 122 32531	100pF 5% 50V
2755	5322 122 32531	100pF 5% 50V
2756	5322 122 32531	100pF 5% 50V
2757	5322 122 32531	100pF 5% 50V
2758	5322 122 32531	100pF 5% 50V
2759	5322 122 32531	100pF 5% 50V
2760	5322 122 32531	100pF 5% 50V
2761	5322 122 32531	100pF 5% 50V
2762	5322 122 32531	100pF 5% 50V
2763	5322 122 32531	100pF 5% 50V
2764	5322 122 32531	100pF 5% 50V
2765	5322 122 32531	100pF 5% 50V
2766	5322 122 32531	100pF 5% 50V
2767	5322 122 32531	100pF 5% 50V
2768	5322 122 32531	100pF 5% 50V
2769	5322 122 32654	22nF 10% 63V
2770	5322 122 32654	22nF 10% 63V
2771	4822 124 40433	47µF 20% 25V
2772	4822 124 40433	47µF 20% 25V
2773	4822 122 33342	33nF 10% 63V
2774	5322 122 32654	22nF 10% 63V
2775	5322 122 32654	22nF 10% 63V
2776	5322 122 32654	22nF 10% 63V
2777	4822 124 40433	47µF 20% 25V
2778	4822 124 40433	47µF 20% 25V
2779	5322 122 32654	22nF 10% 63V
2780	4822 122 33342	33nF 10% 63V
2781	5322 122 32654	22nF 10% 63V
2782	5322 122 32654	22nF 10% 63V
2783	4822 124 40433	47µF 20% 25V
2784	4822 124 40433	47µF 20% 25V
2785	5322 122 32654	22nF 10% 63V
2786	5322 122 32654	22nF 10% 63V
2787	4822 124 40196	220µF 20% 16V
2788	4822 124 40196	220µF 20% 16V
2789	5322 122 34123	1nF 10% 50V
2790	5322 122 34123	1nF 10% 50V
2791	5322 122 31863	330pF 5% 50V
2792	5322 122 31863	330pF 5% 50V
2793	4822 122 33175	2,2nF 20% 50V
2794	4822 122 33175	2,2nF 20% 50V
2795	4822 124 41997	470µF 10V
2796	4822 124 41997	470µF 10V
2797	4822 124 40433	47µF 20% 25V
2798	4822 124 40433	47µF 20% 25V
2799	4822 121 43526	47nF 5% 100V
2800	4822 121 43526	47nF 5% 100V
2801	4822 121 41935	12nF 5% 250V
2802	4822 121 41935	12nF 5% 250V
2803	4822 122 33219	1,8nF 10% 50V
2804	4822 122 33219	1,8nF 10% 50V
2805	4822 124 40435	10µF 20% 50V
2806	4822 124 40435	10µF 20% 50V
2807	4822 122 33891	3,3nF 10% 63V
2808	4822 122 33891	3,3nF 10% 63V
2810	4822 122 33177	10nF 20% 50V
2811	4822 122 33177	10nF 20% 50V
2812	4822 122 33177	10nF 20% 50V
2813	4822 122 33177	10nF 20% 50V
2814	4822 122 33177	10nF 20% 50V
2815	4822 122 33177	10nF 20% 50V
2816	4822 122 33177	10nF 20% 50V
2817	4822 122 33177	10nF 20% 50V
2818	4822 122 33177	10nF 20% 50V
2819	4822 124 40433	47µF 20% 25V
2820	4822 124 40433	47µF 20% 25V
2821	4822 124 40433	47µF 20% 25V
2822	4822 124 40433	47µF 20% 25V
2823	4822 124 40433	47µF 20% 25V

2824	4822 124 40433	47µF 20% 25V
2825	4822 124 40433	47µF 20% 25V
2826	4822 124 40433	47µF 20% 25V
2827	4822 124 40433	47µF 20% 25V
2828	4822 124 40433	47µF 20% 25V
2829	4822 124 40433	47µF 20% 25V
2830	4822 124 40433	47µF 20% 25V
2831	4822 124 41596	22µF 20% 50V
2832	4822 124 41596	22µF 20% 50V
2833	4822 122 33177	10nF 20% 50V
2834	4822 122 33177	10nF 20% 50V
2835	4822 124 41596	22µF 20% 50V
2836	4822 124 41596	22µF 20% 50V
2837	4822 122 33177	10nF 20% 50V
2838	4822 122 33177	10nF 20% 50V
2839	4822 124 41596	22µF 20% 50V
2840	4822 124 41596	22µF 20% 50V
2841	4822 122 33177	10nF 20% 50V
2842	4822 122 33177	10nF 20% 50V
2843	4822 124 41596	22µF 20% 50V
2844	4822 124 41596	22µF 20% 50V
2845	4822 122 33177	10nF 20% 50V
2846	4822 122 33177	10nF 20% 50V
2847	4822 124 40435	10µF 20% 50V
2848	4822 124 40435	10µF 20% 50V
2849	5322 122 34099	470pF 10% 63V
2850	5322 122 34099	470pF 10% 63V
2851	4822 122 32614	1.2nF 10% 50V
2852	4822 122 32614	1.2nF 10% 50V
2853	5322 122 32531	100pF 5% 50V
2854	5322 122 32531	100pF 5% 50V
2855	5322 122 33538	150pF 5% 63V
2856	5322 122 33538	150pF 5% 63V
2857	5322 122 32531	100pF 5% 50V
2858	5322 122 32531	100pF 5% 50V
2859	4822 124 41596	22µF 20% 50V
2860	4822 122 10166	22nF 30% 16V
2862	5322 122 32654	22nF 10% 63V
2863	5322 122 32654	22nF 10% 63V
2864	5322 122 34099	470pF 10% 63V
2865	5322 122 34099	470pF 10% 63V
2867	4822 126 10326	180pF 5%
2868	4822 126 10326	180pF 5%
2880	5322 121 42386	100nF 5% 63V
2881	5322 121 42386	100nF 5% 63V
2882	5322 121 42386	100nF 5% 63V
2883	5322 121 42386	100nF 5% 63V
2884	5322 121 42386	100nF 5% 63V
2885	4822 121 41857	10nF 5% 250V
2886	4822 121 41857	10nF 5% 250V
2887	4822 121 41857	10nF 5% 250V
2888	4822 121 41857	10nF 5% 250V
2889	4822 124 40433	47µF 20% 25V
2890	4822 124 40435	10µF 20% 50V

2891	4822 124 40433	47µF 20% 25V
2900	4822 124 40433	47µF 20% 25V
2901	5322 122 32659	33pF 5% 50V
2902	5322 122 32659	33pF 5% 50V
2903	5322 122 33538	150pF 5% 63V
2904	4822 122 32575	220pF 10% 500V
2907	4822 122 33177	10nF 20% 50V
2908	4822 124 40435	10µF 20% 50V
2909	5322 122 33538	150pF 5% 63V
2910	4822 122 33177	10nF 20% 50V
2912	4822 124 40435	10µF 20% 50V
2915	4822 124 41525	100µF 20% 25V
2916	4822 124 40433	47µF 20% 25V
2917	4822 124 40433	47µF 20% 25V
2918	4822 122 33177	10nF 20% 50V
2919	4822 122 33177	10nF 20% 50V
2920	5322 122 32654	22nF 10% 63V
2921	5322 122 32654	22nF 10% 63V
2922	4822 122 33177	10nF 20% 50V
2923	5322 122 33538	150pF 5% 63V
2924	4822 126 11005	4,7nF 20% 50V
2925	4822 124 41525	100µF 20% 25V
2926	4822 126 11005	4,7nF 20% 50V
2927	4822 122 32442	10nF 50V
2928	5322 122 33538	150pF 5% 63V
2929	5322 122 33538	150pF 5% 63V
2930	5322 122 32654	22nF 10% 63V
2931	4822 122 32614	1.2nF 10% 50V
2932	5322 122 32659	33pF 5% 50V
2933	5322 122 34123	1nF 10% 50V
2934	4822 122 32575	220pF 10% 500V
2950	4822 124 40239	0,47µF 20% 63V
2951	4822 124 40239	0,47µF 20% 63V
2952	4822 124 40435	10µF 20% 50V
2953	4822 124 40435	10µF 20% 50V
2954	4822 124 40435	10µF 20% 50V
2955	4822 124 41577	4,7µF 20% 50V
2956	4822 124 41577	4,7µF 20% 50V
2957	4822 124 40433	47µF 20% 25V
2958	4822 126 11005	4,7nF 20% 50V
2960	4822 126 11005	4,7nF 20% 50V
2961	4822 122 32575	220pF 10% 500V
2962	5322 122 32659	33pF 5% 50V
2963	5322 122 32654	22nF 10% 63V
2964	5322 122 31863	330pF 5% 50V
2965	5322 122 32654	22nF 10% 63V
2966	5322 122 32659	33pF 5% 50V
2967	5322 122 32654	22nF 10% 63V
2968	5322 122 31863	330pF 5% 50V
2969	5322 121 42386	100nF 5% 63V
2970	5322 122 32659	33pF 5% 50V
2971	4822 122 32575	220pF 10% 500V
2973	5322 122 32659	33pF 5% 50V
2974	5322 122 32654	22nF 10% 63V

2975	5322 122 31863	330pF 5% 50V
2976	5322 121 42386	100nF 5% 63V
2977	4822 124 40435	10µF 20% 50V
2978	4822 124 40435	10µF 20% 50V
2979	4822 124 40435	10µF 20% 50V
2980	4822 126 11005	4,7nF 20% 50V
2981	4822 126 11005	4,7nF 20% 50V
2982	4822 126 11005	4,7nF 20% 50V
2983	4822 122 32575	220pF 10% 500V
2984	4822 126 11005	4,7nF 20% 50V
2985	4822 122 32575	220pF 10% 500V
2986	4822 124 40435	10µF 20% 50V
2988	4822 126 11005	4,7nF 20% 50V
2989	4822 122 10158	1nF 10% 50V
2990	4822 122 32575	220pF 10% 500V
2991	4822 122 32575	220pF 10% 500V
2992	4822 122 32575	220pF 10% 500V

RESISTORS

3351	4822 050 24702	4k7 1% 0,6W
3352	4822 050 24702	4k7 1% 0,6W
3353	4822 052 10109	10Ω 5% 0,33W
3354	4822 050 21003	10k 1% 0,6W
3355	4822 050 24702	4k7 1% 0,6W
3356	4822 116 52197	56Ω 5% 0,5W
3357	4822 116 52197	56Ω 5% 0,5W
3358	4822 050 22203	22k 1% 0,6W
3359	4822 050 25603	56k 1% 0,6W
3360	4822 050 22202	2k2 1% 0,6W
3361	4822 050 22202	2k2 1% 0,6W
3362	4822 052 10479	47Ω 5% 0,33W
3363	4822 050 22203	22k 1% 0,6W
3364	4822 052 10101	100Ω 5% 0,33W
3600	4822 052 10478	4Ω7 5% 0,33W
3601	4822 051 20223	22k 5% 0,1W
3603	4822 052 10228	2Ω2 5% 0,33W
3604	4822 052 10228	2Ω2 5% 0,33W
3620	4822 051 10102	1k 2% 0,25W
3621	4822 051 10102	1k 2% 0,25W
3622	4822 051 10102	1k 2% 0,25W
3623	4822 051 10102	1k 2% 0,25W
3624	4822 051 10102	1k 2% 0,25W
3625	4822 051 20101	100Ω 5% 0,1W
3626	4822 051 10102	1k 2% 0,25W
3627	4822 051 10102	1k 2% 0,25W
3628	4822 051 10102	1k 2% 0,25W
3629	4822 051 10102	1k 2% 0,25W
3630	4822 051 20105	1M 5% 0,1W
3631	4822 051 10102	1k 2% 0,25W
3632	4822 051 10102	1k 2% 0,25W
3633	4822 051 10102	1k 2% 0,25W
3634	4822 051 10102	1k 2% 0,25W

3635	4822 051 20271	270Ω 5% 0,1W
3636	4822 051 20103	10k 5% 0,1W
3637	4822 051 20271	270Ω 5% 0,1W
3638	4822 050 21003	10k 1% 0,6W
3639	4822 050 24709	47Ω 1% 0,6W
3640	4822 051 20101	100Ω 5% 0,1W
3641	4822 051 20103	10k 5% 0,1W
3642	4822 050 21003	10k 1% 0,6W
3643	4822 050 21003	10k 1% 0,6W
3644	4822 051 20103	10k 5% 0,1W
3645	4822 051 20103	10k 5% 0,1W
3646	4822 051 20103	10k 5% 0,1W
3647	4822 051 20103	10k 5% 0,1W
3648	4822 051 20103	10k 5% 0,1W
3649	4822 051 20103	10k 5% 0,1W
3650	4822 051 10102	1k 2% 0,25W
3651	4822 051 20103	10k 5% 0,1W
3652	4822 051 20103	10k 5% 0,1W
3653	4822 051 20104	100k 5% 0,1W
3654	4822 051 20104	100k 5% 0,1W
3655	4822 051 20103	10k 5% 0,1W
3656	4822 051 20103	10k 5% 0,1W
3657	4822 051 20103	10k 5% 0,1W
3658	4822 051 20103	10k 5% 0,1W
3659	4822 051 20103	10k 5% 0,1W
3660	4822 051 20152	1k5 5% 0,1W
3661	4822 050 23301	330Ω 1% 0,6W
3662	4822 051 20103	10k 5% 0,1W
3663	4822 051 20103	10k 5% 0,1W
3664	4822 051 20569	56Ω 5% 0,1W
3665	4822 051 20105	1M 5% 0,1W
3666	4822 051 20105	1M 5% 0,1W
3667	4822 051 20473	47k 5% 0,1W
3668	4822 051 20271	270Ω 5% 0,1W
3669	4822 050 21003	10k 1% 0,6W
3670	4822 116 52235	1M 5% 0,5W
3671	4822 051 20332	3k3 5% 0,1W
3672	4822 051 20104	100k 5% 0,1W
3673	4822 051 20103	10k 5% 0,1W
3674	4822 051 20103	10k 5% 0,1W
3675	4822 051 20473	47k 5% 0,1W
3700	4822 101 21199	10kX2 20% 0,025W
3702	4822 051 10102	1k 2% 0,25W
3703	4822 051 10102	1k 2% 0,25W
3704	4822 050 21501	150Ω 1% 0,6W
3705	4822 050 21501	150Ω 1% 0,6W
3706	4822 051 20183	18k 5% 0,1W
3707	4822 051 20183	18k 5% 0,1W
3708	4822 051 20103	10k 5% 0,1W
3709	4822 051 20103	10k 5% 0,1W
3710	4822 051 20103	10k 5% 0,1W
3711	4822 051 20103	10k 5% 0,1W
3712	4822 052 10109	10Ω 5% 0,33W
3713	4822 052 10109	10Ω 5% 0,33W

3714	4822 051 20473	47k	5%	0,1W
3715	4822 051 20103	10k	5%	0,1W
3716	4822 051 20682	6k8	5%	0,1W
3717	4822 051 20473	47k	5%	0,1W
3718	4822 051 20473	47k	5%	0,1W
3719	4822 051 20473	47k	5%	0,1W
3720	4822 051 20473	47k	5%	0,1W
3721	4822 051 20473	47k	5%	0,1W
3722	4822 051 20473	47k	5%	0,1W
3723	4822 051 20473	47k	5%	0,1W
3724	4822 051 20473	47k	5%	0,1W
3725	4822 051 20473	47k	5%	0,1W
3726	4822 051 20473	47k	5%	0,1W
3727	4822 051 20473	47k	5%	0,1W
3728	4822 051 20473	47k	5%	0,1W
3729	4822 051 20473	47k	5%	0,1W
3730	4822 051 20473	47k	5%	0,1W
3731	4822 051 20473	47k	5%	0,1W
3732	4822 051 20473	47k	5%	0,1W
3733	4822 051 20473	47k	5%	0,1W
3734	4822 051 20473	47k	5%	0,1W
3735	4822 051 20473	47k	5%	0,1W
3736	4822 051 20473	47k	5%	0,1W
3737	4822 051 20473	47k	5%	0,1W
3738	4822 051 20473	47k	5%	0,1W
3739	4822 116 52217	270Ω	5%	0,5W
3740	4822 116 52217	270Ω	5%	0,5W
3741	4822 116 52217	270Ω	5%	0,5W
3742	4822 116 52217	270Ω	5%	0,5W
3743	4822 116 52217	270Ω	5%	0,5W
3744	4822 116 52217	270Ω	5%	0,5W
3745	4822 116 52217	270Ω	5%	0,5W
3746	4822 116 52217	270Ω	5%	0,5W
3747	4822 116 52217	270Ω	5%	0,5W
3748	4822 116 52217	270Ω	5%	0,5W
3749	4822 116 52217	270Ω	5%	0,5W
3750	4822 116 52217	270Ω	5%	0,5W
3751	4822 051 20561	560Ω	5%	0,1W
3752	4822 051 20561	560Ω	5%	0,1W
3753	4822 051 20561	560Ω	5%	0,1W
3754	4822 051 20561	560Ω	5%	0,1W
3755	4822 051 20101	100Ω	5%	0,1W
3756	4822 051 20101	100Ω	5%	0,1W
3757	4822 051 20561	560Ω	5%	0,1W
3758	4822 051 20561	560Ω	5%	0,1W
3759	4822 051 20101	100Ω	5%	0,1W
3760	4822 051 20101	100Ω	5%	0,1W
3761	4822 051 20561	560Ω	5%	0,1W
3762	4822 051 20561	560Ω	5%	0,1W
3763	4822 051 20101	100Ω	5%	0,1W
3764	4822 051 20101	100Ω	5%	0,1W
3765	4822 051 20561	560Ω	5%	0,1W
3766	4822 051 20561	560Ω	5%	0,1W
3767	4822 051 20561	560Ω	5%	0,1W

3768	4822 051 20561	560Ω	5%	0,1W
3769	4822 051 20332	3k3	5%	0,1W
3770	4822 051 20332	3k3	5%	0,1W
3771	4822 116 52217	270Ω	5%	0,5W
3772	4822 116 52217	270Ω	5%	0,5W
3773	4822 116 52217	270Ω	5%	0,5W
3774	4822 116 52217	270Ω	5%	0,5W
3775	4822 116 52217	270Ω	5%	0,5W
3776	4822 116 52217	270Ω	5%	0,5W
3777	4822 051 20472	4k7	5%	0,1W
3778	4822 051 20472	4k7	5%	0,1W
3779	4822 051 20104	100k	5%	0,1W
3781	4822 051 20473	47k	5%	0,1W
3782	4822 051 20473	47k	5%	0,1W
3785	4822 051 20101	100Ω	5%	0,1W
3786	4822 051 20101	100Ω	5%	0,1W
3787	4822 050 22202	2k2	1%	0,6W
3788	4822 050 22202	2k2	1%	0,6W
3789	4822 050 22202	2k2	1%	0,6W
3790	4822 050 22202	2k2	1%	0,6W
3791	4822 051 20101	100Ω	5%	0,1W
3792	4822 051 20101	100Ω	5%	0,1W
3793	4822 051 20272	2k7	5%	0,1W
3794	4822 051 20272	2k7	5%	0,1W
3795	4822 051 20151	150Ω	5%	0,1W
3796	4822 051 20151	150Ω	5%	0,1W
3797	4822 051 10102	1k	2%	0,25W
3798	4822 051 10102	1k	2%	0,25W
3799	4822 051 20159	15Ω	5%	0,1W
3800	4822 051 20159	15Ω	5%	0,1W
3801	4822 051 20683	68k	5%	0,1W
3802	4822 051 20683	68k	5%	0,1W
3803	4822 051 20682	6k8	5%	0,1W
3804	4822 051 20682	6k8	5%	0,1W
3805	4822 051 20562	5k6	5%	0,1W
3806	4822 051 20562	5k6	5%	0,1W
3807	4822 051 20473	47k	5%	0,1W
3808	4822 051 20473	47k	5%	0,1W
3809	4822 051 20689	68Ω	5%	0,1W
3810	4822 051 20689	68Ω	5%	0,1W
3811	4822 116 52217	270Ω	5%	0,5W
3812	4822 116 52217	270Ω	5%	0,5W
3814	4822 051 20008	0Ω	5%	0,1W
3815	4822 051 20473	47k	5%	0,1W
3816	4822 051 20473	47k	5%	0,1W
3817	4822 051 20008	0Ω	5%	0,1W
3830	4822 051 20008	0Ω	5%	0,1W
3831	4822 116 52217	270Ω	5%	0,5W
3832	4822 116 52217	270Ω	5%	0,5W
3833	4822 116 52217	270Ω	5%	0,5W
3834	4822 116 52217	270Ω	5%	0,5W
3835	4822 050 14709	47Ω	1%	0,4W
3836	4822 050 14709	47Ω	1%	0,4W
3837	4822 050 14709	47Ω	1%	0,4W

3838	4822 050 14709	47Ω	1%	0,4W
3839	4822 051 20473	47k	5%	0,1W
3840	4822 051 20473	47k	5%	0,1W
3841	4822 051 20561	560Ω	5%	0,1W
3842	4822 051 20561	560Ω	5%	0,1W
3843	4822 051 20473	47k	5%	0,1W
3844	4822 051 20473	47k	5%	0,1W
3845	4822 050 21302	1k3	1%	0,6W
3846	4822 050 21302	1k3	1%	0,6W
3847	4822 050 22002	2k	1%	0,6W
3848	4822 050 22002	2k	1%	0,6W
3849	4822 050 23302	3k3	1%	0,6W
3850	4822 050 23302	3k3	1%	0,6W
3851	4822 050 25102	5k1	1%	0,6W
3852	4822 050 25102	5k1	1%	0,6W
3853	4822 050 28202	8k2	1%	0,6W
3854	4822 050 28202	8k2	1%	0,6W
3855	4822 050 21203	12k	1%	0,6W
3856	4822 050 21203	12k	1%	0,6W
3857	4822 050 21803	18k	1%	0,6W
3858	4822 050 21803	18k	1%	0,6W
3859	4822 050 22703	27k	1%	0,6W
3860	4822 050 22703	27k	1%	0,6W
3861	4822 050 22203	22k	1%	0,6W
3862	4822 050 22203	22k	1%	0,6W
3863	4822 051 20569	56Ω	5%	0,1W
3864	4822 051 20101	100Ω	5%	0,1W
3865	4822 051 20101	100Ω	5%	0,1W
3866	4822 051 10102	1k	2%	0,25W
3867	4822 051 10102	1k	2%	0,25W
3880	4822 050 21003	10k	1%	0,6W
3881	4822 051 20569	56Ω	5%	0,1W
3882	4822 051 20569	56Ω	5%	0,1W
3883	4822 051 20569	56Ω	5%	0,1W
3884	4822 051 20569	56Ω	5%	0,1W
3885	4822 051 20569	56Ω	5%	0,1W
3886	4822 053 12478	4Ω7	5%	3W
3887	4822 052 10478	4Ω7	5%	0,33W
3888	4822 051 20222	2k2	5%	0,1W
3889	4822 051 20181	180Ω	5%	0,1W
3890	4822 051 20008	0Ω	5%	0,1W
3891	4822 051 20682	6k8	5%	0,1W
3892	4822 051 20334	330k	5%	0,1W
3893	4822 051 20103	10k	5%	0,1W
3894	4822 051 20105	1M	5%	0,1W
3900	4822 051 20105	1M	5%	0,1W
3902	4822 051 10008	0Ω	5%	0,25W
3904	4822 051 20393	39k	5%	0,1W
3905	4822 051 20561	560Ω	5%	0,1W
3906	4822 051 20101	100Ω	5%	0,1W
3907	4822 050 14709	47Ω	1%	0,4W
3908	4822 051 20393	39k	5%	0,1W
3909	4822 051 20561	560Ω	5%	0,1W
3910	4822 050 14709	47Ω	1%	0,4W

3911	4822 051 10008	0Ω	5%	0,25W
3913	4822 051 20008	0Ω	5%	0,1W
3914	4822 051 20008	0Ω	5%	0,1W
3915	4822 051 20562	5k6	5%	0,1W
3916	4822 051 20392	3k9	5%	0,1W
3917	4822 051 20392	3k9	5%	0,1W
3918	4822 051 20271	270Ω	5%	0,1W
3919	4822 051 20271	270Ω	5%	0,1W
3920	4822 051 10008	0Ω	5%	0,25W
3921	4822 051 20008	0Ω	5%	0,1W
3922	4822 051 20008	0Ω	5%	0,1W
3923	4822 051 20392	3k9	5%	0,1W
3924	4822 051 20123	12k	5%	0,1W
3925	4822 051 20223	22k	5%	0,1W
3926	4822 051 20562	5k6	5%	0,1W
3927	4822 051 10102	1k	2%	0,25W
3928	4822 051 20222	2k2	5%	0,1W
3929	4822 051 20222	2k2	5%	0,1W
3930	4822 051 20222	2k2	5%	0,1W
3931	4822 051 10102	1k	2%	0,25W
3932	4822 051 20101	100Ω	5%	0,1W
3933	4822 051 20101	100Ω	5%	0,1W
3934	4822 051 20473	47k	5%	0,1W
3935	4822 051 20103	10k	5%	0,1W
3936	4822 051 20561	560Ω	5%	0,1W
3937	4822 051 20821	820Ω	5%	0,1W
3938	4822 051 20101	100Ω	5%	0,1W
3939	4822 051 20273	27k	5%	0,1W
3940	4822 051 20273	27k	5%	0,1W
3941	4822 051 20473	47k	5%	0,1W
3942	4822 051 20222	2k2	5%	0,1W
3943	4822 051 20183	18k	5%	0,1W
3944	4822 051 20104	100k	5%	0,1W
3945	4822 051 20104	100k	5%	0,1W
3946	4822 050 14709	47Ω	1%	0,4W
3947	4822 051 20473	47k	5%	0,1W
3948	4822 051 20684	680k	5%	0,1W
3949	4822 051 20222	2k2	5%	0,1W
3950	4822 050 23301	330Ω	1%	0,6W
3951	4822 050 23301	330Ω	1%	0,6W
3952	4822 052 10479	47Ω	5%	0,33W
3953	4822 051 20223	22k	5%	0,1W
3954	4822 051 20223	22k	5%	0,1W
3955	4822 050 16809	68Ω	1%	0,4W
3956	4822 051 10008	0Ω	5%	0,25W
3957	4822 051 20103	10k	5%	0,1W
3958	4822 050 21002	1k	1%	0,6W
3959	4822 050 21002	1k	1%	0,6W
3960	4822 051 10102	1k	2%	0,25W
3961	4822 053 10229	22Ω	5%	1W
3962	4822 051 10102	1k	2%	0,25W
3963	4822 051 20272	2k7	5%	0,1W
3964	4822 051 20103	10k	5%	0,1W
3965	4822 051 20682	6k8	5%	0,1W

3966	4822 051 20103	10k 5% 0,1W
3967	4822 050 21003	10k 1% 0,6W
3968	4822 051 20272	2k7 5% 0,1W
3969	4822 051 20272	2k7 5% 0,1W
3970	4822 051 20103	10k 5% 0,1W
3971	4822 051 20682	6k8 5% 0,1W
3972	4822 051 20103	10k 5% 0,1W
3973	4822 051 20109	10Ω 5% 0,1W
3974	4822 051 20829	82Ω 5% 0,1W
3975	4822 051 20103	10k 5% 0,1W
3976	4822 051 20332	3k3 5% 0,1W
3977	4822 051 10102	1k 2% 0,25W
3978	4822 051 20829	82Ω 5% 0,1W
3979	4822 051 20109	10Ω 5% 0,1W
3980	4822 051 20103	10k 5% 0,1W
3981	4822 051 20682	6k8 5% 0,1W
3982	4822 051 20103	10k 5% 0,1W
3983	4822 051 20109	10Ω 5% 0,1W
3984	4822 051 20829	82Ω 5% 0,1W
3985	4822 051 20829	82Ω 5% 0,1W
3986	4822 051 20109	10Ω 5% 0,1W
3987	4822 051 20271	270Ω 5% 0,1W
3988	4822 051 20101	100Ω 5% 0,1W
3989	4822 051 20473	47k 5% 0,1W
3990	4822 051 20689	68Ω 5% 0,1W
3991	4822 051 20332	3k3 5% 0,1W
3992	4822 051 10008	0Ω 5% 0,25W
3993	4822 051 20689	68Ω 5% 0,1W
3994	4822 051 20008	0Ω 5% 0,1W
3995	4822 051 10008	0Ω 5% 0,25W
3996	4822 051 20822	8k2 5% 0,1W
3997	4822 051 20008	0Ω 5% 0,1W
3998	4822 051 20332	3k3 5% 0,1W
3999	4822 051 20332	3k3 5% 0,1W

COILS

5001	4822 146 31162	MAINS TRAFO
5600	4822 242 81002	CST 6MHz
5602	4822 156 20966	FXD IND 47 µH
5620	4822 242 72527	CST 4MHz
5751	4822 157 70062	IND FXD 320µH
5752	4822 157 70062	IND FXD 320µH
5880	5322 158 10052	HF CHOKE 600R 50HZ
5881	4822 156 20966	IND FXD 47 µH
5900	4822 242 71349	11,289 600 MHz
5915	4822 156 20966	FXD IND 47 µH
5916	4822 156 20966	FXD IND 47 µH
5950	4822 156 20966	FXD IND 47 µH
5951	4822 156 20966	FXD IND 47 µH
5952	4822 156 20966	FXD IND 47 µH
5957	4822 156 20966	FXD IND 47 µH
5958	4822 156 20966	FXD IND 47 µH

DIODES

6351	5322 130 30684	1N4002GP
6352	5322 130 30684	1N4002GP
6353	5322 130 30684	1N4002GP
6354	5322 130 30684	1N4002GP
6355	5322 130 30684	1N4002GP
6356	5322 130 30684	1N4002GP
6357	5322 130 30684	1N4002GP
6358	5322 130 30684	1N4002
6359	5322 130 30684	1N4002GP
6360	4822 130 30621	1N4148
6361	5322 130 30684	1N4002GP
6362	4822 130 30621	1N4148
6363	4822 130 30621	1N4148
6364	4822 130 30621	1N4148
6365	5322 130 30684	1N4002GP
6366	5322 130 30684	1N4002GP
6367	4822 130 34398	BZX79-C24
6368	4822 130 34233	BZX79-C5V1
6369	4822 130 34173	BZX79-C5V6
6370	4822 130 30621	1N4148
6600	4822 130 30621	1N4148
6601	4822 130 30621	1N4148
6602	4822 130 30621	1N4148
6604	4822 130 31983	BAT85
6605	4822 130 31983	BAT85
6609	4822 130 91154	DISPLAY
6610	4822 214 51772	GP1U521X
6620	4822 209 72895	LED
6622	4822 130 82978	LED
6623	4822 130 82978	LED
6650	4822 130 30621	1N4148
6651	4822 130 30621	1N4148
6656	4822 130 30621	1N4148
6657	4822 130 34233	BZX79-C5V1
6658	5322 130 34563	BZX79-C2V7
6659	4822 130 34197	BZX79-C12
6660	5322 130 30684	1N4002
6670	4822 130 30621	1N4148
6751	4822 130 34268	BZX79-C16
6880	4822 130 31983	BAT85
6881	4822 130 31983	BAT85
6882	4822 130 31983	BAT85
6883	4822 130 31983	BAT85
6915	4822 130 80937	BAV74
6916	4822 130 31983	BAT85
6918	4822 130 30621	1N4148
6919	4822 130 30621	1N4148
6920	4822 130 30621	1N4148
6921	4822 130 30621	1N4148
6922	4822 130 30621	1N4148
6951	4822 130 30621	1N4148

6952	4822 130 30621	1N4148
6953	4822 130 30621	1N4148
6954	4822 130 30621	1N4148
6955	4822 130 30621	1N4148
6956	4822 130 30621	1N4148
6957	4822 130 31983	BAT85

TRANSISTORS & IC's

7351	4822 130 44121	BC338
7352	4822 130 44121	BC338
7353	4822 130 44197	BC558B
7354	4822 130 40937	BC548B
7355	5322 209 71759	MC78M15CT
7356	5322 209 86361	MC7915CT
7357	4822 209 71579	TY40408
7358	4822 209 73233	MC79L05ACP
7359	4822 130 40824	BD136
7603	4822 209 31621	TMP47C670
7620	4822 209 31619	MC68H005C4
7621	4822 130 61207	BC848
7622	4822 130 61207	BC848
7623	5322 130 42012	BC858
7624	4822 130 61207	BC848
7625	4822 130 61207	BC848
7626	4822 130 61207	BC848
7636	5322 130 42216	TL081CP
7651	4822 130 61207	BC848
7655	4822 209 62098	ST24C02AB1
7680	4822 209 31623	MSL915
7681	4822 209 31623	MSL915
7700	4822 209 82362	NJM4556D
7701	4822 130 42616	BC818-40
7702	4822 130 42616	BC818-40
7703	5322 130 41983	BC858B
7704	5322 130 41982	BC848B
7751	4822 209 72748	LC7821
7752	4822 209 72748	LC7821
7753	4822 209 30986	LC4966
7754	4822 209 73064	NJM2068D-D
7755	4822 130 63122	2SK369
7756	4822 130 63122	2SK369
7757	4822 130 63122	2SK369
7758	4822 130 63122	2SK369
7759	4822 130 40937	BC548B
7760	4822 209 83274	NJM4560D
7761	4822 209 83274	NJM4560D
7762	4822 209 83274	NJM4560D
7763	4822 209 83274	NJM4560D
7764	4822 209 83274	NJM4560D
7765	4822 209 83274	NJM4560D
7825	5322 209 12171	PC74HC4094T
7828	4822 209 83274	NJM4560D
7829	4822 209 73064	NJM2068D-D
7832	5322 209 61483	PC74HC4051T
7833	5322 209 61483	PC74HC4051T
7880	4822 209 31622	AK5339
7900	4822 209 62588	PCF3523P
7901	4822 130 61207	BC848
7907	4822 130 61207	BC848
7909	4822 209 31624	PC74HC4015T
7911	4822 209 30735	MC74HC175D
7912	4822 209 30735	MC74HC175D
7915	4822 209 30704	MC74HCU04D
7916	5322 130 41982	BC848B
7917	5322 130 41982	BC848B
7918	5322 130 41982	BC848B
7921	5322 130 41982	BC848B
7922	5322 130 41983	BC858B
7923	5322 130 41983	BC858B
7924	4822 130 42616	BC818-40
7925	4822 130 42616	BC818-40
7926	5322 130 41982	BC848B
7927	4822 209 31615	LM324AD
7950	4822 209 30704	MC74HCU04D
7951	4822 209 30704	MC74HCU04D
7952	4822 130 61207	BC848
7953	4822 130 61207	BC848
7954	4822 130 61207	BC848
7955	4822 209 71339	TC9164N
7956	4822 209 60792	PC74HC4053T
7957	4822 209 30704	MC74HCU04D